Green Chemistry

PAPER

View Article Online
View Journal

Open Access Article. Published on 05 December 2025. Downloaded on 1/20/2026 9:05:21 PM.
This article is licensed under a Creative Commons Attribution-NonCommercial 3.0 Unported Licence.

Check for updates

Cite this: DOI: 10.1039/d5gc05081b

Enhancing circularity of polyolefins *via* gasification: techno-economic and environmental evaluation of variant processes

Benjamin Caudle,[a] Thuy T. H. Nguyen[a,b] and Sho Kataoka *[a,b]

Gasification is often promoted as a primary means of converting plastic waste into a valuable product, advancing the goals of waste reduction and resource conservation. However, the most common form of chemical upcycling – converting plastic waste into other chemicals – results in the continued production of plastics from fossil fuels and requires more energy than conventional methods of disposal. This work models a fully circular system in which plastic waste is gasified to syngas and reconstituted into polyolefins *via* methanol and olefin synthesis, allowing gasification to be rigorously compared with other polymer recycling technologies. The model is designed to test a range of waste feeds and process conditions with the aim of minimizing cost and carbon footprint while maximizing the circularity. It is found that gasification alone has worse performance in terms of minimum selling price (MSP of $1.85 per kg product) and carbon footprint (CFP of 1.79 kg CO_2-equivalent per kg waste) than mechanical and solvent-based recycling methods, and even conventional polyolefin production from fossil fuels followed by disposal *via* incineration with energy recovery ($1.50 per kg product, 1.33 kg CO_2-eq. per kg waste). This is primarily due to the high energy demand of gasification and syngas reforming, the need for additional process inputs such as pure O_2, and the relatively low product yield. To address these challenges, novel process modifications are proposed and evaluated to improve both the economic and environmental performance of the gasification process. It is found that integrating gasification with mechanical recycling process results in an overall increase in circularity with an acceptable cost ($0.87 per kg product) and carbon footprint (1.25 kg CO_2-eq. per kg waste). This indicates that future gasification systems should be designed to target highly mixed and contaminated, secondary plastic waste streams that would normally be rejected by other methods.

Received 26th September 2025,
Accepted 7th November 2025

DOI: 10.1039/d5gc05081b

rsc.li/greenchem

Green foundation

1. This work advances green chemistry by critically analyzing gasification, a process proposed as a solution to plastic waste. It covers a wider range of performance indicators (environmental, economic, material) and process configurations than any single previous study. Although gasification does not perform well when used to create circular polymers, a path to success is found though integrating gasification with other recycling processes.
2. This work analyzes gasification using detailed, flexible process models with energy integration. Three process metrics are used to compare seven different gasification process configurations for their potential to increase material circularity while decreasing carbon footprint and cost relative to other recycling routes and the conventional polymer lifecycle.
3. Advances in methanol synthesis and methanol-to-olefins processes will increase the efficiency of gasification as a circular solution to plastic waste, but a major hurdle is the cost and availability of green hydrogen. Further research into wholistic plastic recycling systems, including a minimum of noncircular "upcycling", is the current best direction for a green polymer ecosystem.

1 Introduction

Plastics have many benefits that make them indispensable to modern society, but their linear lifespan has resulted in a buildup of waste that is causing incalculable damage to the environment and human health.[1] While international concern has long focused on the buildup of plastic waste in the environment and depletion of fossil resources, production &

[a]*Research Institute for Chemical Process Technology, National Institute of Advanced Industrial Science and Technology (AIST), Central 5, 1-1-1 Higashi, Tsukuba 305-8565, Ibaraki, Japan. E-mail: s-kataoka@aist.go.jp*
[b]*Integrated Research Center for CCUS Implementation, National Institute of Advanced Industrial Science and Technology (AIST), Central 5, 1-1-1 Higashi, Tsukuba 305-8565, Ibaraki, Japan*

Open Access Article. Published on 05 December 2025. Downloaded on 1/20/2026 9:05:21 PM.
This article is licensed under a Creative Commons Attribution-NonCommercial 3.0 Unported Licence.

disposal of plastic is also a significant source of greenhouse gases, accounting for over 4% of global CO_2-equivalent emissions in 2015.[2] Recent action to replace landfilling with incineration has significantly reduced the problem of waste entering the environment but further increased the lifetime CO_2 emissions of plastics.[3] It is vital to move towards a circular ecosystem in which both negative environmental impacts of plastic waste are virtually eliminated through reduction, recycling, and proper disposal.

Thermal recovery – burning waste to generate heat or electricity – is the most common form of disposal in Japan, while mechanical recycling is the most common form of recycling, accounting for just over 20% of post-consumer plastic waste – a share that has been increasing in recent years.[3] Because physical sorting alone is insufficient to create a stream of pure polymer, the product of mechanical recycling is invariably of lower quality than virgin plastic and follows a downward cascading 'life spiral'.[4,5] Solvent-based recycling, a form of mechanical recycling in which specific plastics are selectively dissolved and precipitated to isolate them from a mixture, is a promising alternative.[6–8] While it produces a nearly-virgin-quality product, solvents must be carefully chosen to suit the input waste and target polymer.[9] Moreover, the waste feed requires some degree of physical sorting beforehand to remove excessive contamination, and the presence of additives can reduce the effectiveness of this method.[10,11] Other options exist but have not yet achieved practical implementation. For example, chemical depolymerization is effective for certain plastics but is not practically applicable to polyolefins.[12–14] Depolymerization *via* supercritical water shows promising initial results but is still in the early stages of investigation.[15]

Gasification is a well-developed alternative to mechanical recycling and depolymerization. Because it breaks down most plastic waste into small molecules, it has proven effective at converting a variety of waste into a uniform product.[16,17] The resulting syngas can be separated to extract H_2 and CH_4 or used in chemical synthesis.[18–20] Prior investigations into gasification of plastic waste are typically limited to producing chemicals other than polymers, so-called chemical "upcycling". For example, Prifti *et al.* investigated a process that converts mixed polyethylene (PE) and polypropylene (PP) into methanol *via* gasification, steam-methane reforming (SMR) and methanol synthesis from syngas.[21] They determined that the process is economically feasible, but did not perform an analysis of the greenhouse gas emissions.[22] Another potentially limiting factor is the choice of waste feed. Because of material availability constraints, Prifti *et al.* were limited to PE and PP in their reactor feed, which will have a different syngas product from that produced from mixed plastic waste. The effect of this discrepancy on circular polyolefin production is one subject of this work. Other researchers, most notably Kuusela *et al.*, have analyzed the process of converting captured CO_2 into polyolefins *via* methanol synthesis, a methanol-to-propylene (MTP) reactor, and polymerization of the isolated ethylene and propylene.[23,24] Their lifecycle analysis indicates that the process provides a net sink for captured CO_2, but the process would operate at a loss without subsidies or significantly higher credits for CO_2 capture. Analyzing the processes separately misses the large potential for integration between gasification, a net endothermal process, and methanol and olefin synthesis, which are net exothermal. Other factors, such as the variability of the waste plastic feed, sources of raw materials such as oxygen and hydrogen, and potential options for optimizing the process should be explored in depth. To give gasification a thorough investigation as a potential route to circular polymers, it is necessary to investigate the entire process, from waste to product, under a variety of configurations.

This work looks at this part of the circular plastic ecosystem, analyzing the potential for plastic recycling *via* gasification, with a thorough investigation of process designs and a look at integration with other recycling methods. The target waste is a mix of plastics commonly found in post-consumer waste in Japan, including polyethylene (PE), polypropylene (PP), polystyrene (PS), and polyethylene-terephthalate (PET) and the target products are simple polyolefins (PE and PP). Because anything short of a circular process results in continuing production of plastics from fossil fuels at increasing rates, the products of the process are the polyolefins polypropylene and polyethylene. The entire process consumes considerable energy and a significant amount of the original mass is lost. To counteract these effects, variations on the process design and operation are investigated with the goal of minimizing the carbon footprint and process cost while maximizing the circularity.

2 Methods

2.1 Gasification process design

The novel process designed for the base case scenario is illustrated in Fig. 1 (a detailed process flow diagram is included in the SI as Fig. S1). In this process, plastic waste with a composition close to that of municipal plastic waste is fed into a fluidized bed gasification reactor and decomposed into syngas. The syngas must then be upgraded to remove CH_4 and increase the H_2/CO ratio *via* SMR, which requires high-temperature heat typically provided by burning natural gas. The upgraded syngas is then converted to methanol, which needs to be separated from reactants and byproducts, and then transformed *via* a methanol to propylene (MTP) reactor. The main product of the MTP reactions is propylene, but there are significant fractions of propane, ethylene, ethane, and other lighter and heavier components. The separation of these fractions to isolate propylene and ethylene for polyolefin synthesis requires more energy, while disposing of unwanted byproducts *via* combustion replaces natural gas as the heat source for the SMR. Although not precisely circular, since other plastics included in the feed are not recreated, PP and PE are chosen as the target products due to their simplicity. If gasification proves to be viable for this case, expansion to other polymers should be investigated for future processes.

Open Access Article. Published on 05 December 2025. Downloaded on 1/20/2026 9:05:21 PM.
This article is licensed under a Creative Commons Attribution-NonCommercial 3.0 Unported Licence.

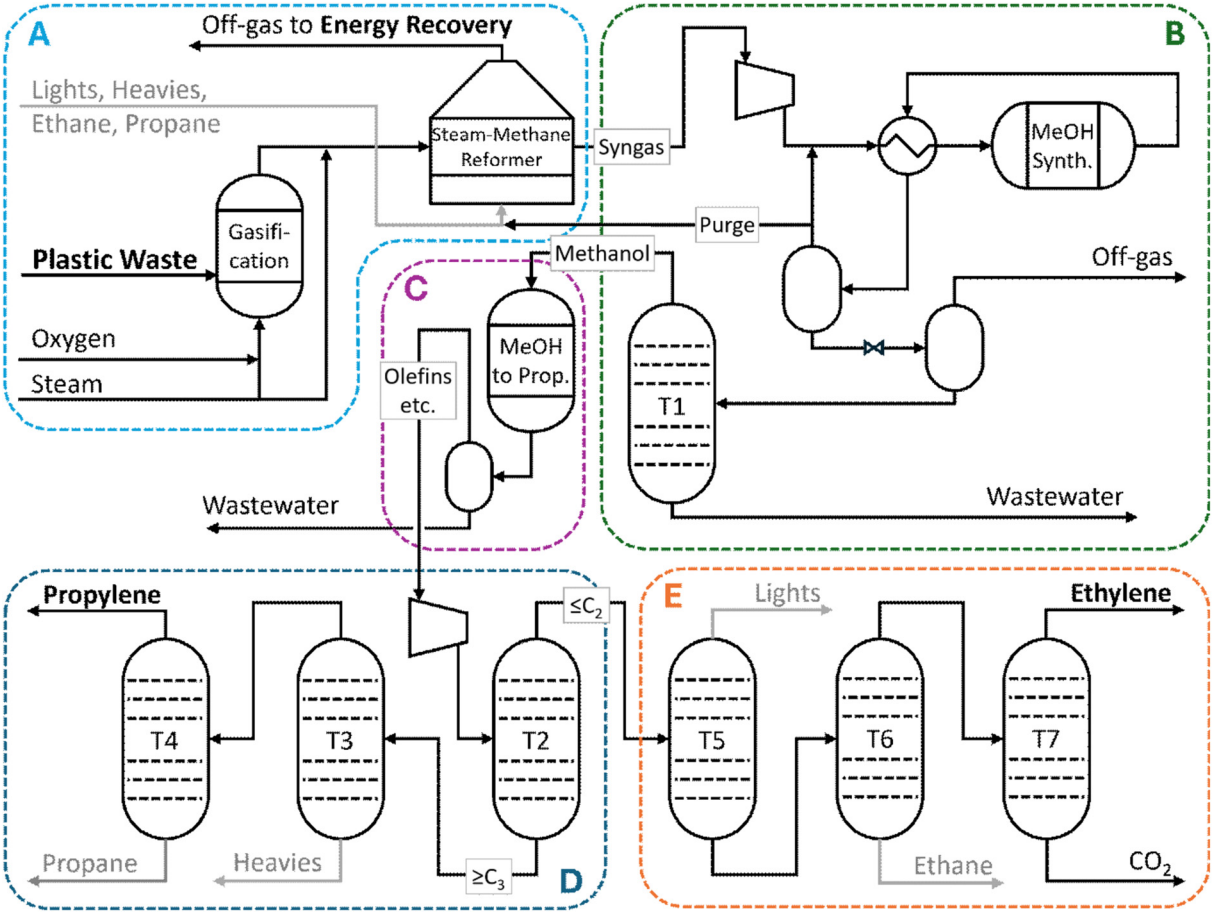

Fig. 1 Outline of the gasification process modeled for this work. Sections are (A) gasification and steam methane reforming, (B) methanol synthesis, (C) methanol-to-propylene, (D) propylene recovery and (E) ethylene recovery. Trapezoids represent compressors, while hollow rounded rectangles are flash vessels. Not all equipment is shown.

Prior to being fed into the process, plastic waste is collected by a municipal government at a material recovery facility (MRF) and then transported to the location of the recycling plant for a fee. Municipal plastic waste collected in Japan has an average composition of 35% PE, 24% PP, 12% PS, and 29% others by mass.[3] The other plastics are modeled as PS and PET with a simplified decomposition mechanism to represent saturated, cyclic, and oxygenated polymer chains as well as possible organic contaminants. In principle, PVC is not collected along with other post-consumer plastic waste in Japan, but chlorinated polymers may still enter the waste recovery system. This process ignores that fraction to simplify the model and give gasification some economic leeway. Chemical and thermal methods are available for treating PVC in the pyrolysis feed.[25] While PET has been observed to cause agglomeration during pyrolysis, the use of PET as a representative polymer for this model is considered acceptable because (1) the high temperature of gasification should encourage rapid, complete decomposition and (2) the actual PET content of Japanese municipal plastic waste is actually quite low, as PET has a high collection rate as its own category.[26] As the plastic is supplied from the existing waste management system, capital costs for the MRF are not included in calculations. However, the operating costs of this process are reflected in the delivered cost of the plastic waste while material and energy usage are included in the lifecycle analysis.

The plastic waste from the MRF enters section (A), being fed into a fluidized bed gasifier at a rate of 5000 kg h^{-1} with a mix of steam and pure oxygen as the fluidizing gas. The amount of oxygen is controlled at an equivalence ratio of approximately 2.1 so that incomplete combustion of the contents maintains the temperature of the reactor at 600 °C. Calculations for conversion for this and subsequent reactors are described in the Modeling methodology section, 2.2. The products of gasification are mixed with additional steam, achieving a ratio of approximately 2.6 mol H_2O per mol C fed, before entering the steam-methane reforming furnace, which contains a $Ni/MgAl_2O_4$ catalyst and is maintained at 900 °C *via* combustion of the process byproducts.[21,22] The stream exiting the SMR has a molar composition of approximately 40% H_2, 15% CO, and 10% CO_2 with the balance being mostly water. Water is removed *via* condensation and the resulting stream is compressed in two stages with intercooling to 80 bar and enters section (B). The fresh syngas is mixed with recycled, unreacted syngas and fed into the methanol synthesis reactor.

Open Access Article. Published on 05 December 2025. Downloaded on 1/20/2026 9:05:21 PM.
This article is licensed under a Creative Commons Attribution-NonCommercial 3.0 Unported Licence.

The exothermal MeOH synthesis reactions occur in a Lurgi boiling water reactor, operated at a target temperature of 230 °C over a commercial catalyst.[27] The stream exiting the reactor is cooled to 40 °C to condense methanol and water, with 95% of the remaining vapor recycled to the MeOH reactor and 5% purged to the SMR furnace. The pressure of liquid product is reduced to 2 bar and flashed again to remove CO_2 that had condensed with the first flash. Methanol at 98.5% molar purity is separated from water in a distillation column (T1) with a recovery rate of 99.5%. This is the feed to the Methanol to Propylene (MTP) process (C).

Methanol from the gasification/MeOH synthesis area is preheated with reactor effluent and reacted in a Lurgi MTP reactor at 400 °C.[28] The product of this reaction contains 1% CO_2, 52% H_2O, 6% C_2H_4, and 21% C_3H_6 by mass. After cooling to condense water, this stream is pressurized to 20 bar and sent through a series of distillation columns (sections D and E) for separation. Column T2 separates $\leq C_2$ molecules from $\geq C_3$ molecules. The heavy fraction is then separated into C_3 molecules and heavy ends ($\geq C_4$) in T3, and the C_3 molecules are further separated into propane and propylene in T4. The overall yield of 99.9% pure propylene is approximately 40% of the mass of plastic input. Ethylene at 99.9% purity and approximately 12% overall mass yield can be recovered from the light fraction through a series of three refrigerated columns. T5 (condenser at −126 °C) removes light ends (H_2, CH_4, CO), T6 (−33 °C) removes ethane, and T7 (−160 °C) separates ethylene from CO_2. Light ends, ethane, propane, and heavy ends are recovered in small amounts with low purity and so are not deemed worthwhile to recover in saleable form. They replace natural gas as fuel in the SMR furnace, with excess heat used to generate process steam and electricity.

Propylene and ethylene produced by the process are supplied to a polyolefin plant for processing into plastics. As this process replaces a traditional source of ethylene and propylene, the capital cost of constructing the plastic production facility is not included in calculations. However, the material and energy usage contribute to the operating costs and the corresponding CO_2-equivalent emissions are included in the lifecycle analysis.

2.2 Modeling methodology

The base case gasification process described in section 2.1 and variations on it were modeled in Aspen Plus.[29] The resulting mass and energy balances are used to estimate the CO_2-equivalent emissions and cash flow of the process, while the process conditions are used to size equipment for the calculation of capital expenses. The detailed flow diagram and stream details are included in the SI. As, aside from the first step, the process primarily involves small, nonpolar molecules and water, the Peng–Robinson equation of state with Boston–Mattias correction is used to model phase equilibrium. Due to the rapid nature of the gasification and steam-methane reforming reactions, the gasification reactor and SMR are modeled as equilibrium reactors. The methanol synthesis reactions are modeled using the Vanden Bussche–Froment kinetics in a plug-flow reactor with constant thermal fluid temperature.[30] The methanol to propylene reactor is modeled with fixed component yields based on Lurgi MTP processes found in the literature (not counting H_2O, 64.6%, the remainder is: 45.4% C_3H_6, 25.3% C_2H_6, 18.5% C_2H_4, 4.1% C_4H_{10} 3.3%, C_3H_8 1.8% C_4H_8, 1.1% CH_4, 0.3%C_5H_{10}, 0.2% H_2, 0.2% CO on a molar basis).[28,31–34] Each distillation column is optimized for recovery and purity of its desired product, with flow rates and temperatures recorded in Table S1. Heat integration is carried out to minimize the consumption of heating and cooling energy, with important points of integration illustrated in Fig. S1. Pumps are given 85% overall efficiency, while compressors and turbines are given 75% overall efficiency.

2.3 Evaluation methodology

Technoeconomic and Lifecycle analysis are performed based on the boundary illustrated in Fig. 2. It includes mechanical sorting, gasification, and polymerization. Although the strength of gasification is its ability to accept waste with a high degree of mixing and contamination, certain other plastics, particularly polyvinyl chloride (PVC), and contaminants, such as metals, need to be physically removed *via* mechanical sorting. Mechanical sorting and polymerization are established processes operating at many industrial sites and so are

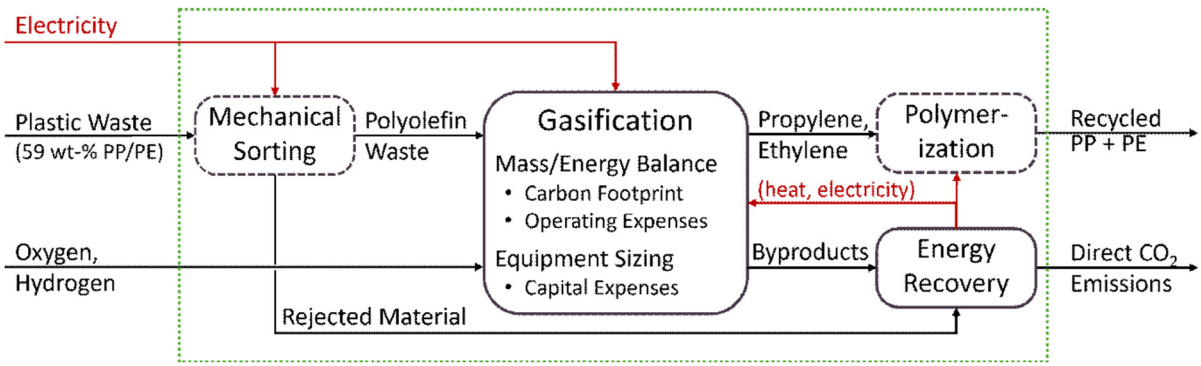

Fig. 2 Process evaluation boundary (green) showing material (black) and energy (red) flows. Processes with solid outlines are modeled in detail, while dashed outlines indicate processes not modeled but included in the analysis.

Open Access Article. Published on 05 December 2025. Downloaded on 1/20/2026 9:05:21 PM.
This article is licensed under a Creative Commons Attribution-NonCommercial 3.0 Unported Licence.

not modeled in detail here. Their contribution to the lifecycle of recycled polyolefins is estimated from literature data. The gasification and energy recovery sections are modeled in detail to determine the mass and energy balance for lifecycle analysis as well as estimate operating and capital expenses.

Carbon footprint. Each type of mass and energy flow crossing the boundary has an associated CO_2-equivalent emission factor that is determined by its method of production (for material inflows) or disposal (for waste outflows). Products can be credited with avoided emissions relative to the conventional method of production, in which case these avoided emissions are subtracted from the net emissions of the process. For example, the generation of one kilowatt-hour of electricity results in 0.435 kg of indirect CO_2-equivalent emissions (the average for the Japanese electric grid). This is added to the CFP for each kWh of electricity is supplied to the process and subtracted for each kWh of electricity is exported from the process. In short, the carbon footprint (CFP) is:

$$\mathrm{CFP} = \frac{\sum F_{\mathrm{X}} \dot{X}}{\mathrm{FU}} \tag{1}$$

where FU is the functional unit (discussed later in this section), F_{X} is the emission factor (in kg CO_2-equivalent per flow unit), and $\dot{X}$ is the flow (typically kg h^{-1} or kW) for each material or energy component X crossing the system boundary.

The emission factors for all mass and energy flows crossing the process boundary are included in Table 1. Some, such as electricity and purified oxygen, are obtained from publicly available data while others are calculated based on the energy required for their production. For example, the emission factor of cooling water is derived from the electricity needed to operate the pumps of a circulation loop including cooling towers. Steam production is attributed primarily to the emissions of natural gas combustion in boilers with additional contribution from electricity used for condensate recirculation. The emission factor for plastic waste is calculated based on transportation (50 km by light truck), shredding, and baling.

Table 1 Emission factors and prices of materials and energy that cross the process boundary

Material (unit)	Emission factor (kg CO_2-eq. per unit)	Price ($ per unit)
Plastic waste (kg)	0.121[a]	0.160[d]
Oxygen (kg)	~1[b]	0.054[e]
Process water (ton)	~0	0.177[f]
Waste water (ton)	~0	0.056[f]
Electricity (kWh)	0.435[c]	0.109[c]
Steam (kWh)	0.284[a]	0.039[a]
Cooling water (kWh)	0.0046[a]	0.0013[f]
Refrigerant (kWh)	0.261[a]	0.065[a]
V.L.T. refrigerant (kWh)	1.958[a]	0.491[a]
Polypropylene (kg)	2.01[a]	1.49[e]
Polyethylene (kg)	2.02[a]	1.53[e]

[a] Calculated. [b] Inventory database for environmental analysis (proprietary).[39] [c] Japan electric power information center (2024).[40] [d] Low estimate of Honma & Hu (2021).[41] [e] Ministry of economy, trade, and industry.[42] [f] Turton *et al.*[43]

The emission factors for fossil-fuel based PP and PE are calculated based on the lifecycle inventory compiled by Narita *et al.*[35] and are in line with the values reported for other regions.[36,37] These factors are applied to the products of the process as avoided emissions, which may be subtracted from the CFP to represent the emissions avoided by replacing current production methods.

When evaluating the CFP of the gasification process, two functional units can be applied. When comparing gasification with methods of disposing plastic waste that produce different products, a basis of 1 kg waste input is the most appropriate. In this case, products exported from the process generate avoided emissions. When comparing circular processes, however, it is preferable to use the basis of 1 kg product.[38] This allows direct comparison of equivalent products, with processing inefficiencies reflected in the CFP increasing or decreasing inversely to yield.

Minimum selling price. The cost of each mass and energy flow across the process boundary is also included in Table 1. These costs are used with the mass and energy balance to calculate the operating expenses and revenues of the recycling process. Other recurring costs such as overhead and maintenance are calculated based on the cost estimation methods of Turton *et al.*[43] Capital costs are based on equipment sizes determined by the optimal operating parameters as determined by the simulation, and updated to reflect prices in 2023, the most recent year for which price data is consistently available, with a Chemical Engineering Plant Cost Index (CEPCI) of 798.[44]

The capital costs and net operating income are then combined into the net present value (NPV), a well-known metric that represents the profitability of a proposed plant over its operating lifetime. NPV is a function of the capital expenses, CAPEX, operating expenses, OPEX, operating income from sale of polyolefins, OPIN, and economic factors (such as internal rate of return, depreciation structure, tax rate, *etc.*), ECON, up to year n of operation:

$$\mathrm{NPV} = \mathrm{NPV}(\mathrm{CAPEX}, \mathrm{OPEX}, \mathrm{OPIN}, \mathrm{ECON})_n \tag{2}$$

with the complete set of equations explained in section II of Turton *et al.*[43] The minimum selling price (MSP) is the price of PP needed to achieve the break-even NPV at the end of the final year of plant operation, N:

$$\mathrm{NPV}(\mathrm{CAPEX}, \mathrm{OPEX}, \mathrm{OPIN}(\mathbf{MSP}), \mathrm{ECON})_N = 0 \tag{3}$$

When calculated, it assumes that the price ratio of PP : PE is maintained at the current value of 1 : 1.03. MSP is a useful way to compare the economics of PP and PE produced *via* recycling with those derived from fossil fuels.

The NPV and MSP are calculated based on a typical plant lifespan of 15 years. The capital expenses are invested during construction prior to "year zero" and then depreciated linearly over the first 5 years of operation. Additional financial considerations for base case evaluation are a discount rate of 10%, typical for a process that has been well-studied with some commercial implementation, and an annual tax rate of 40%.

Open Access Article. Published on 05 December 2025. Downloaded on 1/20/2026 9:05:21 PM.
This article is licensed under a Creative Commons Attribution-NonCommercial 3.0 Unported Licence.

Carbon circularity. The circularity of a process can be evaluated using the carbon balance. This is performed by comparing the amount of carbon that leaves the boundary in usable form with the amount of carbon entering the system. In this case, all carbon enters the system boundary *via* the plastic waste stream, while usable carbon is found in PE and PP products and unusable carbon escapes as waste emissions (mostly CO_2 released to the atmosphere). The circularity can be described by the equation:

$$\text{Circularity} = \frac{C_{\text{products}}}{C_{\text{feed}}} \tag{4}$$

where C is the mass of carbon atoms in the products or feed. A higher value of carbon circularity indicates that the process maintains a larger portion of carbon in a usable form, as opposed to being lost *via* waste emissions.

3 Results and discussion

3.1 Base case

The plastic waste feed into the process, based on the average of post-consumer plastic waste in Japan as reported by the PWMI, contains 24% PP and 35% PE, with the mix of other plastics represented by PS (19%) and PET (22%) for modeling purposes. The gasification reactor requires 2662 kg of O_2 (approximate equivalence ratio of 0.5) and 13 606 kg of steam to maintain temperature and generate the desired ratio of H_2 to CO from the SMR. Single pass conversion of CO into CH_3OH in the MeOH reactor is 19% (molar basis), with the recycling of noncondensing gases bringing the overall conversion to 68% on a carbon atom basis (a methanol production rate of 7561 kg h^{-1}). As the MeOH synthesis reactions are exothermal, steam from this reactor is used to heat other operations, such as the reboiler of the methanol distillation column. The fixed conversion of methanol to olefins yields 1600 kg h^{-1} propylene and 435 kg h^{-1} ethylene, over 99% of which is recovered *via* the intensive distillation process. A small amount is lost in the conversion from propylene and ethylene to PP and PE. The overall mass yield of polyolefins (PP + PE) from waste plastic is 40%. Table 2 includes key process metrics for the base case scenario. A process flow diagram with detailed stream information can be found in the SI. The results are consistent (<1% deviation when process conditions are equivalent) with those of previous models based on experimental studies, namely the plastic waste to methanol process of Prifti *et al.*[21,22] and the syn-gas to polypropylene process of Kuusela *et al.*[23]

The largest source of emissions is the combustion of byproducts, which contribute 4.17 kg CO_2-eq. per kg product. This is followed by oxygen (1.46 kg kg^{-1}), which is isolated from air *via* an energy-intensive process, and electricity (0.49 kg kg^{-1}), whose main users are the syngas compressors for MeOH synthesis and air compressors for combustion in the SMR. The balance of heat generation and consumption indicates that no external source of heating is required, but not enough heat is produced to justify exporting it to another process. As such, no heat crosses the process boundary, and the equivalent emissions and cost of process heating are both zero. Electricity generated from residual heat from SMR makes up over half of the electricity requirements of the process, but there are still emissions and costs associated with importing the remaining amount. The total emissions, 6.74 kg CO_2-eq. per kg product, are significantly higher than the emissions for fossil-fuel-based production of polyolefins, which are around 2 kg CO_2-eq. per kg for both polypropylene and polyethylene. Fig. 3 shows detailed contributions to the carbon footprint, capital expenses, and operating expenses of the process.

The considerable capital expenses are due mainly to the SMR reactor, which accounts for 30% of the overall cost. As a fundamental step in any gasification process, the cost of the SMR reactor is exceedingly difficult to mitigate without changing the feed or intended products. The total capital cost of the plastic-to-methanol portion of the plant, parts (A) and (B) in Fig. 1, is closely aligned to that calculated by Prifti *et al.*[21] for the same process once inflation is accounted for. Other significant capital expenditures are the compressors for syngas before MeOH synthesis and air for the SMR, as well as the distillation columns which present significant contributions to the cost towers and heat exchangers. Operating costs are dominated by the cost of waste collection, contributing \$0.40 per kg product out of \$0.64 per kg total. This indicates that the

Table 2 Selected process metrics for the base case

	Metric	Flow across boundary	Equivalent emissions [kg CO_2-eq. per kg product]	Cost [\$ per kg product]
Material inputs	Waste feed	5000 kg h^{-1}	0.30	0.40
	Oxygen	2662 kg h^{-1}	1.46	0.07
Material outputs	Polypropylene	1589 kg h^{-1}	−1.58	−1.14
	Polyethylene	428 kg h^{-1}	−0.43	−0.34
	Direct CO_2 emissions	8404 kg h^{-1}	4.17	
Energy inputs/outputs	Process heating	9211 kW	0	0
	Heat generation	10 754 kW		
	Electricity	5834 kW	0.49	0.12
	Electric. generation	3571 kW		
	Cooling water	15 344 kW	0.03	0.01
	Refrigerant	994 kW	0.29	0.05

Open Access Article. Published on 05 December 2025. Downloaded on 1/20/2026 9:05:21 PM.
This article is licensed under a Creative Commons Attribution-NonCommercial 3.0 Unported Licence.

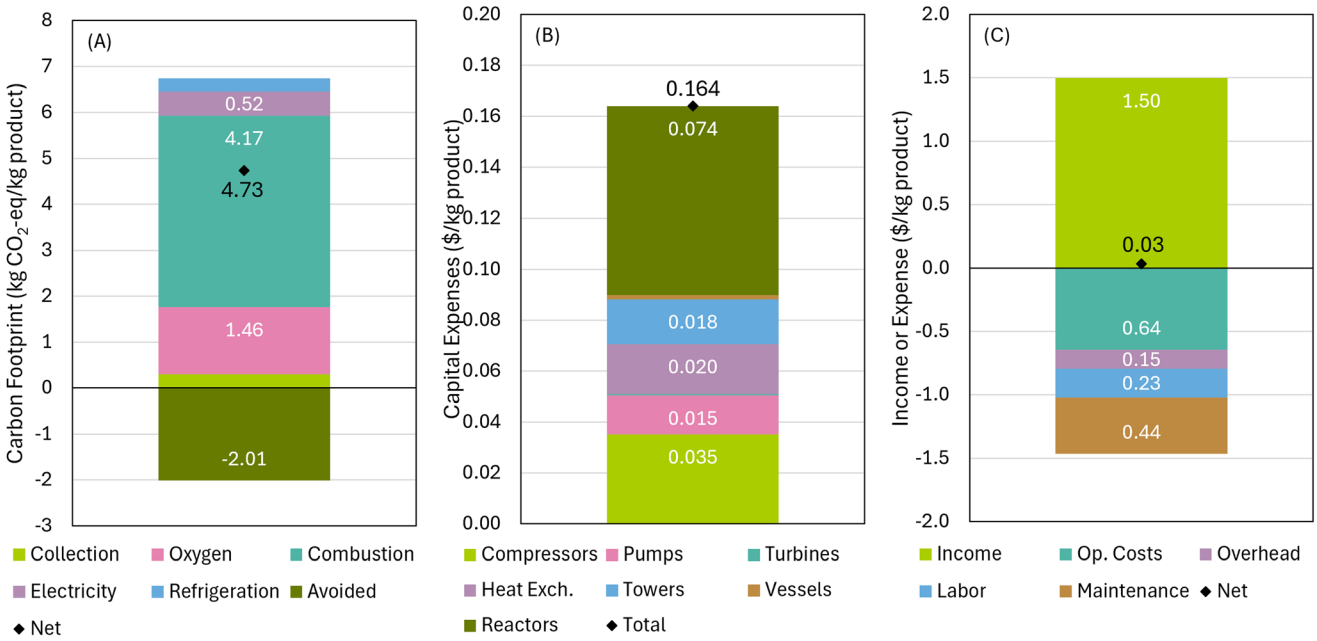

Fig. 3 Breakdown of (A) carbon footprint, (B) capital expenses, and (C) operating income/expenses for the base case. Operating (Op.) Costs include all raw materials (waste delivery, O_2) and utilities (electricity and electricity for cooling).

process is particularly sensitive to the method of waste acquisition, with government-subsidized or free feed making a large impact on the potential profitability. Other significant contributions come from electricity for the compressors and the purchase of pure O_2. With such high capital expenditure, the estimated maintenance costs are correspondingly high, and the complexity of the system requires significant operating labor. These two factors are greater than process operating costs, doubling the total operating expenses and resulting in a net operating income barely above zero.

3.2 Comparison with other plastic disposal methods

The CFP, MSP, and carbon circularity of gasification recycling are compared with alternative end-of-life treatments for plastic waste, summarized in Fig. 4. Using a basis of 1 kg waste allows noncircular methods to be compared, particularly thermal recovery, which produces no product, and mechanical recycling, which produces an inferior product. The process boundary is similar to that shown in Fig. 2, with mechanical sorting and combustion for thermal recovery included. As these processes use older simulations[45] in which thermal recovery is not modeled in detail, values for thermal recovery are estimated *via* direct substitution of the heat of combustion of natural gas with that of the studied plastic waste. For example, 1 kg of unsorted plastic waste replaces 0.70 kg of natural gas (CH_4), based on the higher heating values of the constituent plastics.[46] Values for mechanical recycling, which includes shredding, washing, drying, milling, wind sifting, and extrusion were obtained from literature[47] and correlated with industry observations. Values for solvent recycling are based on models from a previous work, which combined preliminary float-sink separation with a targeted solvent extraction process.[45] In the conventional solvent/antisolvent process, PE and PP are targeted by successive extractions with a solvent and precipitated by mixing with an antisolvent. This process requires a large amount of heat energy to separate the solvents for reuse *via* distillation. In the supercritical (SC) solvent process, supercritical fluids are used in succession to extract PP and PE, with temperature and pressure reduced to induce precipitation. Since most of the fluid is maintained in the supercritical state, energy consumption is much lower than that of the solvent/antisolvent process.

In this framework, the processes are credited with avoided emissions, which are emissions that would be produced from an equivalent amount of virgin PP and PE. The product of each recycling process is modified by an equivalence ratio to determine the mass of virgin PP/PE replaced by each process, which is then multiplied by the emissions factor for the production of PP/PE (2.01 kg CO_2-eq. per kg). While it can vary drastically based on many factors, the equivalence ratio for mechanical recycling is set at 0.7 kg recycled per kg virgin, which is on the low end of the estimates compiled by Nordahl *et al.*[48] and the high end of those estimated by industrial recyclers. Because of this, the carbon circularity of mechanical recycling is displayed in two parts: the virgin-equivalent portion is given a solid fill while the rest is patterned to represent the difference in quality. The equivalence ratio for solvent-based recycling is 0.99, based on literature and industry reports on the quality of plastic from these processes.[49–51] The avoided emissions from product are also affected by the yield, which is 77% of the input PP/PE for mechanical (45% of total waste), 99% of input PP/PE for solvent-based (58% of total waste), and

Open Access Article. Published on 05 December 2025. Downloaded on 1/20/2026 9:05:21 PM.
This article is licensed under a Creative Commons Attribution-NonCommercial 3.0 Unported Licence.

Fig. 4 Comparison of gasification to other polyolefin disposal routes, including thermal recovery, mechanical recycling, and solvent-based recycling. CFP and contributing emissions are on the left axis, MSP on the right axis, and Carbon Circularity is represented with pie charts beneath each column.

40% of the total waste input for gasification. For mechanical and solvent-based recycling, rejected waste is sent to a separate facility for thermal recovery; therefore, both emissions from combustion and avoided emissions from energy recovery are included. Other sources of emissions are indirect emissions from materials (*e.g.* O_2 for gasification and solvent makeup for solvent-based methods), electricity consumption including cooling, and heat demand from both direct (natural gas-fired) and indirect (steam) sources.

In terms of CFP, gasification performs worse than any other disposal methods. This is due to the need for pure O_2, the energy requirement of SMR, and the low yield of product. It offers a degree of circularity that thermal recovery does not, but due to the low yield it performs worse than any other form of recycling in this comparison. The outlying case is mechanical recycling, which converts a higher portion of the feed into product than gasification but at a lower quality with limited usefulness. The calculated MSP follow the trend of energy usage (and thus CFP), making gasification the most expensive route, and significantly worse than fossil-fuel based PP/PE (approximately $1.5 per kg). Mechanical recycling has a very low MSP due to the simple process with low energy usage, and does not adhere to the trend of MSP following CFP due to lower product quality reducing avoided emissions and relatively larger emissions from burning rejected waste. Clearly, major process changes are needed to make gasification a viable component of a circular plastic ecosystem.

3.3 Options for improving gasification

To improve the economic and environmental performance of the gasification process, several innovative process modifications are investigated and evaluated. These include (1) removing the ethylene recovery section to greatly reduce refrigeration costs and reduce capital expenditure, (2) adding H_2 prior to methanol syntheses to increase the H_2/CO ratio and improve methanol yield, using H_2 produced *via* conventional steam methane reforming or (3) produced *via* electrolysis with green electricity, (4) pre-sorting the waste to remove non-polyolefins, thereby decreasing the difference between feed and product and increasing the yield of polyolefins, (5) pre-sorting the waste to remove PP and PE, allowing these fractions to be recycled mechanically while sending the remainder to gasification, and (6) arbitrarily increasing the yield of MTO through hypothetical advances in catalysts or reactor designs.

Open Access Article. Published on 05 December 2025. Downloaded on 1/20/2026 9:05:21 PM.
This article is licensed under a Creative Commons Attribution-NonCommercial 3.0 Unported Licence.

Table 3 Summary of changes that might improve the gasification recycling process

Variant	Brief description	Effects
(1)	Omit ethylene	+ Eliminate costs associated with ethylene separation section – Reduce production of polyolefins
(2)	Add H_2 (SMR)	+ Increase conversion from syngas to methanol – Increase CFP with fossil-fuel-based H_2
(3)	Add H_2 (green)	+ Increase conversion from syngas to methanol – Increase cost with H_2 from electrolysis with green electricity
(4)	Pre-sorted	+ Increase conversion in the gasification process – Decrease overall yield when rejected waste is burned
(5)	Mechanical + gasification	+ Reduce emissions by diverting waste to mechanical process + Increase overall yield by recovering more of original mass – Decrease in overall product quality
(6)	Better MTP	+ Increase yield of polyolefins – Decrease amount of energy generated by burning byproducts

Table 3 summarizes the potential benefit and major drawback of each process variation. The final proposal is speculative, intended to demonstrate the large effect that low polyolefin yield has on the process, but the other five changes are possible with current technology. Fig. 5 illustrates the location of each proposed change on a simplified process diagram, and the flows of major process streams can be found in the SI.

Variant 1. When the ethylene recovery section is removed, low-temperature refrigeration is no longer required and three distillation columns (T5–T7) are eliminated. This reduces CO_2-equivalent emissions from refrigeration and electricity consumption, as ethylene is separated along with other by-products and then combusted to generate heat and power. However, the 21% reduction in polyolefin production reduces circularity and, along with the increase in direct emissions from burning ethylene, causes a net increase in the CFP from 6.74 to 8.60 kg CO_2-eq. per kg product. The ethylene recovery section has many unit operations, but each one has relatively low throughput and so only contributes a small portion of the plants capital and operating costs. Thus, the slight reduction in operating and capital expenses that result from its elimination are insufficient to offset the value of lost product, leading to a higher MSP of \$2.18 per kg PP. These results, along with those of the base case and following process variants, are included in Fig. 6.

Variant 2. H_2 is introduced prior to methanol synthesis at a rate sufficient to maintain the MeOH reactor feed H_2/CO ratio at 2.1, thereby increasing the overall carbon yield of methanol from 68% to 86%. The increase in methanol yield has downstream effects, increasing the carbon circularity to 0.53 kg $C_{prod.}$ kg C_{feed}^{-1}. Since MeOH synthesis and the MTP process are exothermal, there is little effect from reduced burning of byproducts other than a reduction in direct CO_2 emissions. The main effect of higher yield is to reduce the relative contribution of other factors, lowering the CFP to 4.49 kg CO_2-eq. per kg product before including the contribution of H_2. However, since H_2 produced from fossil fuels *via* SMR has an emission factor of 13.2 kg kg^{-1} H_2 (see Table 4), the CFP of this variant rises to 6.65 kg CO_2 per kg product, nearly equal to the base case. The cost of H_2 from SMR is relatively low, however, which together with the higher conversion reduces MSP to \$1.73 per kg PP, almost competitive with conventional polyolefins.

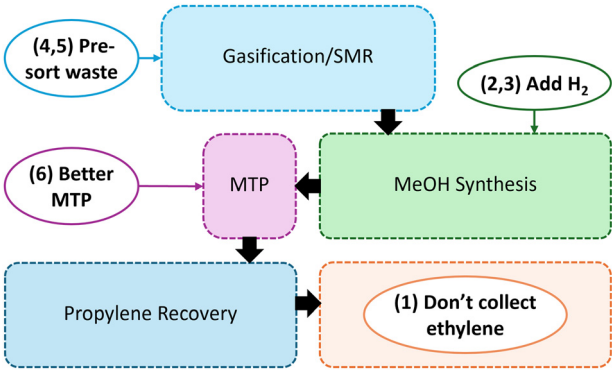

Fig. 5 Simplified diagram showing points of process improvement.

Variant 3. Similar to Var. 2, additional H_2 is added to maintain the MeOH reactor feed H_2/CO ratio at 2.1. While the process itself is unchanged, with the same carbon circularity as Var. 2, the H_2 is assumed to be produced by electrolysis of water using electricity generated from wind power, which has an emission factor less than one tenth that of SMR. This almost eliminates the contribution of H_2 to CFP, bringing it down to 4.63 kg CO_2-eq. per kg product. However, the high cost of electrolysis results in the highest MSP among the variants, at \$3.06 per kg PP.

Variant 4. Sorting plastic waste *via* float/sink separation is an energy-efficient method to mostly isolate polyolefins from other plastics, as PE and PP are the only two major plastics with a density less than that of water. The mechanical sorting step is expanded to include float/sink separation, which yields a stream of approximately 98% PE and PP waste. This should increase the atomic efficiency of the gasification process by bringing the feed and product compositions closer together. This modification increases the conversion of waste to polyolefins by 5%, though the benefit is offset by higher O_2 consumption to ensure complete gasification and a slight reduction in electricity generation. However, the plastic waste fraction rejected by float/sink separation must still be managed, and as in all cases it is treated *via* thermal recovery. This causes the overall carbon circularity to drop to 0.27, the

Open Access Article. Published on 05 December 2025. Downloaded on 1/20/2026 9:05:21 PM.
This article is licensed under a Creative Commons Attribution-NonCommercial 3.0 Unported Licence.

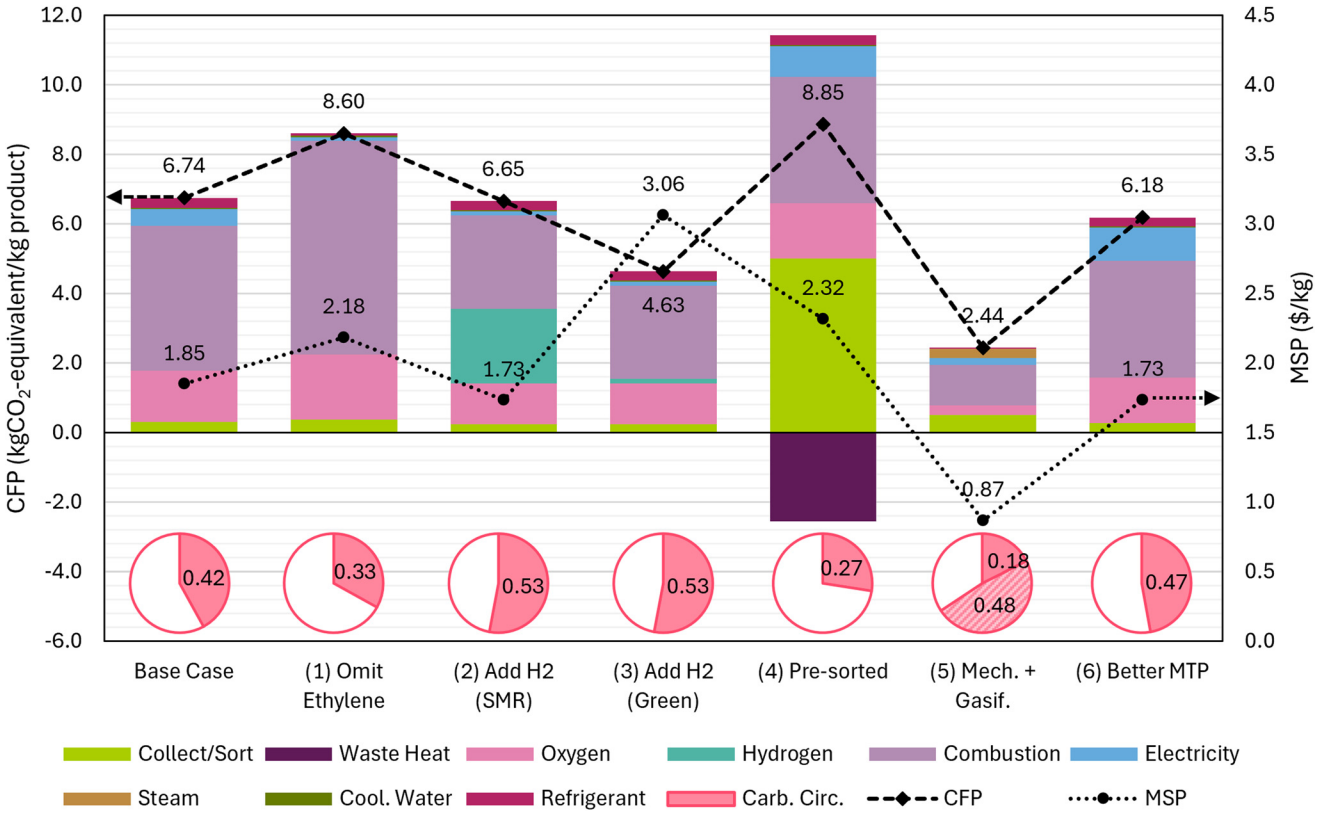

Fig. 6 CFP, MSP, and carbon circularity of the base case and six variants for possibly improving gasification.

Table 4 Emission factors and prices of materials unique to variant gasification processes

Material (unit)	Emission factor (kg CO_2 per unit)	Price ($ per unit)
Hydrogen, SMR (kg)	13.2[a]	1.26[a]
Hydrogen, wind (kg)	0.88[a]	7.86[a]
Waste, sorted (kg)	1.11[b]	0.32[c]
Waste, mech. reject (kg)	0.06[b]	0.08[d]

[a] Parkinson *et al.* (2019).[52] [b] Calculated. [c] Middle estimate of Honma & Hu (2021).[41] [d] Half of value for unsorted waste.

lowest of any variant, and burning 40% of the original mass greatly increases both the CFP, to 8.85 kg CO_2-eq. per kg product, and MSP, to $2.32 per kg PP. This highlights that, given the reality of mixed plastic waste streams, gasification should not be applied selectively to a single polymer type or class of polymers. On the other hand, the small change in product yield for the gasification portion indicates that processes designed on the basis of just PE and/or PP feed, as found in the literature, will perform similarly when subjected to mixed waste streams, as long as the contamination does not pose a problem for the operation of the gasification reactor.

Variant 5. In direct opposition to Var. 4, this option considers a system in which polyolefins are recycled mechanically while the waste rejected from the mechanical recycling process is recycled *via* gasification. Unlike Var. 4, this gasification is less atomically efficient, with a highly mixed feed (modeled with PS and PET), resulting in a CFP of 7.30 kg CO_2-eq. per kg product for gasification alone. However, when both processes are combined, the overall CFP falls to 2.44 kg kg^{-1}, reflecting the high share of mechanically recycled polymer (46.5% of the original mass) compared with gasification product (12.9% of the original mass). This includes the assumption that the mechanically recycled polymer is of lower quality and thus has lower avoided emissions from its product, as discussed in section 3.2. The combined approach performs better than the current lifecycle of fossil-fuel-based polyolefins in terms of CFP. Due to the low MSP of mechanical recycling, the mean MSP of the two processes is only $0.87 per kg PP. With 66% of the carbon recovered as polyolefins, 18% of which is virgin quality, this is the variant with the highest degree of carbon circularity as well. This suggests high potential for a polymer recycling strategy in which inexpensive mechanically recycled plastic is paired with high-quality plastic produced *via* gasification of the waste rejected from the mechanical recycling process.

Variant 6. It is noteworthy that the conversion of the MTP reactor is not high and the low overall process yield results in high CFP, high MSP, and low circularity. To explore the effect of improved catalyst performance, the MTP reactor is assumed to achieve aa 14% increase in the carbon yield of ethylene and propylene (from combined 62.5% to 71.2%). This raises the

Open Access Article. Published on 05 December 2025. Downloaded on 1/20/2026 9:05:21 PM.
This article is licensed under a Creative Commons Attribution-NonCommercial 3.0 Unported Licence.

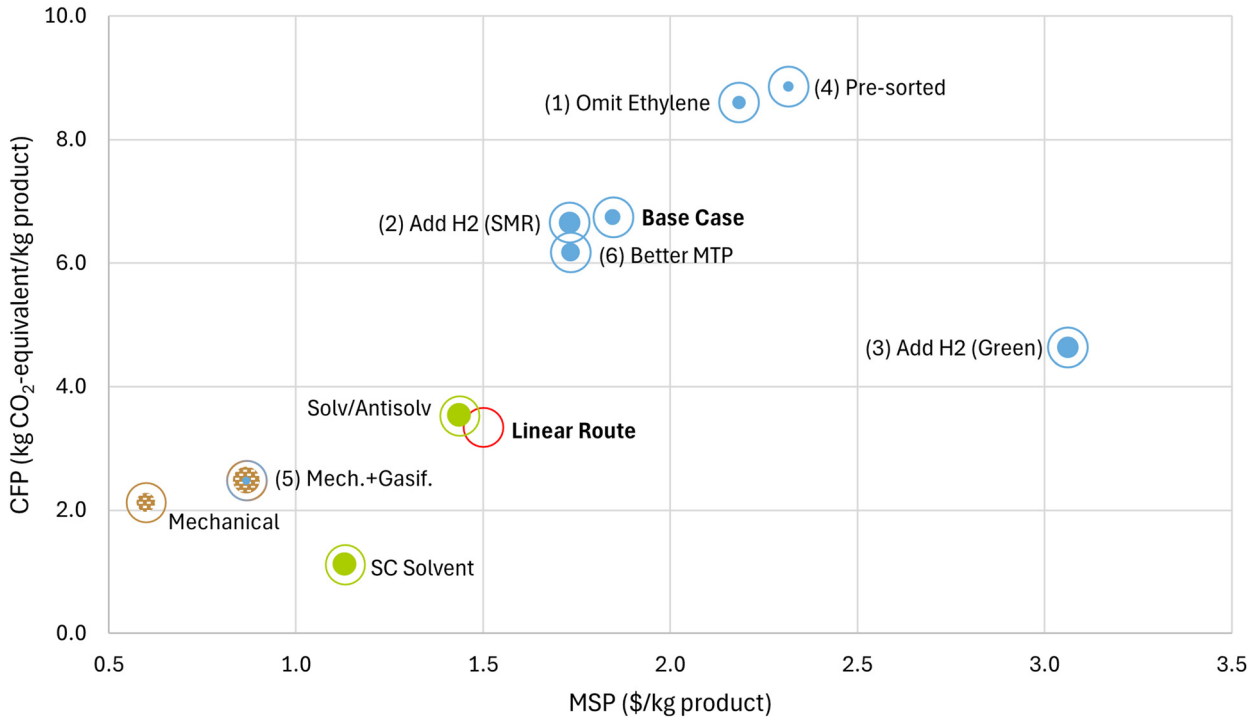

Fig. 7 CFP, MSP, and carbon circularity for various routes for polyolefins. Carbon circularity is indicated *via* the radius of the points, with the outer rings representing 100% carbon circularity. The linear route from fossil fuels to thermal recovery is marked in red, gasification routes in blue, mechanical recycling routes in brown, and solvent-based recycling routes in green.

overall carbon yield of the gasification-reconstitution process to 47%, reducing CFP and MSP per kilogram of product with a concurrent decrease in energy recovery from by-product combustion. The net effect is to reduce CFP to 6.18 kg CO_2-eq. per kg product, and MSP to $1.73 per kg PP. Considering that these represent only 8% and 6% reductions in CFP and MSP, respectively, it seems unlikely that a gasification process will become competitive with fossil polyolefins (requiring reductions of 50% in CFP and 19% in MSP) by improvements in the MTP section alone.

Summary. Fig. 7 illustrates the tradeoff between CFP and MSP for the polyolefin recycling/production options discussed in this work. Circularity is also illustrated by altering the size of the points. Of the gasification routes, the base case is in the middle. Options that reduce the amount of product, such as omitting ethylene collection (Var. 1) and diverting incompatible waste to thermal recovery (Var. 4) negatively impact CFP, MSP and circularity. When H_2 is added to the process (Var. 2/3), circularity is increased while the effect on CFP and MSP varies depending on the source of H_2: using fossil-fuel based H_2 results in a slight reduction in both metrics, while H_2 from green electricity results in a significant decrease in CFP but at a prohibitive increase in cost. While the performance is dependent on the high cost or CFP of H_2, even green H_2 at the same cost as fossil-based H_2 would not result in a process competitive with the conventional linear route. Increasing the yield of product though improvements in MTP yields a reduction in both CFP and cost. When combined with mechanical recycling process (Var. 5) is the only gasification-involving process that performs better than the linear route for polyolefins from fossil fuels to thermal recovery. This combined process has the highest circularity of all the options, with a CFP and MSP closest to that of mechanical recycling. However, the low quality of mechanically recycled polymer makes economic and effective circularity estimates uncertain. Included in the group of processes favorable to the linear route, the two solvent-based recycling processes included here have higher MSP than mechanical but the potential for lower CFP. Based on these results, it is likely that a combination of gasification and solvent-based recycling would provide an even higher degree of circularity, with a similar or lower cost and lower CFP than conventionally produced polyolefins.

4 Conclusions

The results of this study indicate that gasification on its own has little promise for producing circular polyolefins in an environmentally friendly and economical manner. Various process variants were tested, and some improved the economics, emissions, and/or circularity of gasification, but none were competitive with linear route of conventional polyolefins. The unavoidable factor is the large, high-temperature energy requirement of gasification and SMR (approximately 19 MJ kg^{-1} waste), which must be provided by partial combustion of reactor contents (autothermal gasification with O_2) and com-

Open Access Article. Published on 05 December 2025. Downloaded on 1/20/2026 9:05:21 PM.
This article is licensed under a Creative Commons Attribution-NonCommercial 3.0 Unported Licence.

bustion of byproducts. As a result, even a process approaching complete circularity, converting all carbon in the plastic waste into polyolefins, will have a high CFP due to the replacement of byproducts with natural gas as means of heating the SMR. Such a process would not even be as circular as expected, since the methane in natural gas represents an additional source of carbon that will be lost in the form of CO_2. In order to reduce the CFP below that of the current fossil carbon-based polyolefin lifecycle, a gasification process would likely have to incorporate addition of H_2 – preferably green H_2, which will not be available at the necessary scale for the foreseeable future – and the CO_2 produced from the combustion of byproducts would have to be captured. Both improvements would incur additional costs that would lower the prospects of economical implementation.

One option not considered here, the conversion of plastic waste to some other value-added chemical *via* gasification, warrants further study. While the exclusion of this option is justified when comparing routes for circular polymers, there are many other chemicals that can be produced from syn-gas. Some of these chemicals may be cheaper or have a lower CFP when produced from plastics, relative to their conventional production process, but the loss of potential plastic recycling cannot be ignored. Finding an appropriate way to incorporate the unmitigated emissions of plastic production into the calculation of CFP for other chemicals is a significant consideration for this ongoing work.

While gasification has little prospect as a stand-alone solution for polymer circularity, these results point to specific cases where its implementation should be further explored. As part of a circular polymer ecosystem, gasification could be used to process the rejected waste of mechanical or solvent-based recycling processes. It has been shown that combining mechanical recycling with gasification, while higher in CFP and cost than mechanical recycling alone, enhances circularity at a CFP and MSP lower than that of conventional polyolefins. Similar results would be expected for certain solvent-based routes, with the higher quality of solvent-recycled polymers enhancing the circularity even further. In short, gasification is not a complete solution to the interrelated problems of waste plastic buildup and global warming, but it should continue to be studied as one part of an interconnected circular polymer ecosystem.

Conflicts of interest

There are no conflicts to declare.

Data availability

The bulk of the data supporting this article (flow diagrams and stream results) has been included as part of the supplementary information (SI). See DOI: https://doi.org/10.1039/d5gc05081b.

Complete data sets are available upon request from the authors.

Acknowledgements

The present work is supported by JST-CREST (JPMJCR24S6 to S. K). Part of the data was obtained as part of the Council for Science, Technology and Innovation (CSTI), the Cross-ministerial Strategic Innovation Promotion Program (SIP), and the third period of the SIP "Circular Economy System" (JPJ012290).

References

1 P. J. Landrigan, H. Raps, M. Cropper, C. Bald, M. Brunner, E. M. Canonizado, D. Charles, T. C. Chiles, M. J. Donohue, J. Enck, P. Fenichel, L. E. Fleming, C. Ferrier-Pages, R. Fordham, A. Gozt, C. Griffin, M. E. Hahn, B. Haryanto, R. Hixson, H. Ianelli, B. D. James, P. Kumar, A. Laborde, K. L. Law, K. Martin, J. Mu, Y. Mulders, A. Mustapha, J. Niu, S. Pahl, Y. Park, M. L. Pedrotti, J. A. Pitt, M. Ruchirawat, B. J. Seewoo, M. Spring, J. J. Stegeman, W. Suk, C. Symeonides, H. Takada, R. C. Thompson, A. Vicini, Z. Wang, E. Whitman, D. Wirth, M. Wolff, A. K. Yousuf and S. Dunlop, *Ann. Glob. Health*, 2023, **89**, 23.
2 L. Cabernard, S. Pfister, C. Oberschelp and S. Hellweg, *Nat. Sustain.*, 2022, **5**, 139–148.
3 PWMI, *Plastic Products, Plastic Waste and Resource Recovery*, Plastic Waste Management Institute (PWMI), 2024.
4 F. Associates, *Life cycle impacts for postconsumer recycled resins: PET, HDPE, and PP*, The Association of Plastic Recyclers, 2018.
5 M. Baker, M. Stewert, S. Padibjo, C. Stavropoulos, R. Campbell and T. Boseley, *An investigation into the technical and market feasibility of recycling post-consumer polypropylene*, Polysearch Pty. Ltd, 2005.
6 J. Yu, A. d. C. Munguía-López, V. S. Cecon, K. L. Sánchez-Rivera, K. Nelson, J. Wu, S. Kolapkar, V. M. Zavala, G. W. Curtzwiler, K. L. Vorst, E. Bar-Ziv and G. W. Huber, *Green Chem.*, 2023, **25**, 4723–4734.
7 S. H. Zein, A. A. Hussain, O. Y. Yansaneh and A. A. Jalil, *Processes*, 2022, **10**, 2387.
8 T. W. Walker, N. Frelka, Z. Shen, A. K. Chew, J. Banick, S. Grey, M. S. Kim, J. A. Dumesic, R. C. Van Lehn and G. W. Huber, *Sci. Adv.*, 2020, **6**, eaba7599.
9 P. Zhou, J. Yu, K. L. Sánchez-Rivera, G. W. Huber and R. C. Van Lehn, *Green Chem.*, 2023, **25**, 4402–4414.
10 J. N. Hahladakis, C. A. Velis, R. Weber, E. Iacovidou and P. Purnell, *J. Hazard. Mater.*, 2018, **344**, 179–199.
11 S. Ugduler, K. M. Van Geem, M. Roosen, E. I. P. Delbeke and S. De Meester, *Waste Manage.*, 2020, **104**, 148–182.
12 M. Goto, *J. Jpn. Pet. Inst.*, 2016, **59**, 254–258.
13 K. Ragaert, L. Delva and K. Van Geem, *Waste Manage.*, 2017, **69**, 24–58.
14 M. Hong and E. Y. X. Chen, *Green Chem.*, 2017, **19**, 3692–3706.

Open Access Article. Published on 05 December 2025. Downloaded on 1/20/2026 9:05:21 PM.
This article is licensed under a Creative Commons Attribution-NonCommercial 3.0 Unported Licence.

15 T. Thiounn and R. C. Smith, *J. Polym. Sci.*, 2020, **58**, 1347–1364.
16 R. R. Bora, R. Wang and F. You, *ACS Sustainable Chem. Eng.*, 2020, **8**, 16350–16363.
17 S. Kumagai, J. Nakatani, Y. Saito, Y. Fukushima and T. Yoshioka, *J. Jpn. Pet. Inst.*, 2020, **63**, 345–364.
18 I. Barbarias, G. Lopez, M. Artetxe, A. Arregi, J. Bilbao and M. Olazar, *Energy Convers. Manage.*, 2018, **156**, 575–584.
19 K. Momono, J. Ishii, S. Hosohara and H. Kijima, *ISIJ Int.*, 2024, **64**, 954–963.
20 T. Namioka, A. Saito, Y. Inoue, Y. Park, T.-j. Min, S.-a. Roh and K. Yoshikawa, *Appl. Energy*, 2011, **88**, 2019–2026.
21 K. Prifti, A. Galeazzi and F. Manenti, *Ind. Eng. Chem. Res.*, 2023, **62**, 6167–6175.
22 K. Prifti, A. Galeazzi and F. Manenti, *Ind. Eng. Chem. Res.*, 2023, **62**, 5083–5096.
23 K. Kuusela, V. Uusitalo, J. Ahola and J. Levänen, *J. CO2 Util.*, 2021, **52**, 101672.
24 W. Hoppe, N. Thonemann and S. Bringezu, *J. Ind. Ecol.*, 2017, **22**, 327–340.
25 A. López, I. de Marco, B. M. Caballero, M. F. Laresgoiti and A. Adrados, *Fuel Process. Technol.*, 2011, **92**, 253–260.
26 M. Kawai, J. Nakatani, K. Kurisu and Y. Moriguchi, *Resour., Conserv. Recycl.*, 2022, **180**, 10616.
27 L. Chen, Q. Jiang, Z. Song and D. Posarac, *Chem. Eng. Technol.*, 2011, **34**, 817–822.
28 H. Koempel and W. Liebner, *Lurgi's Methanol To Propylene (MTP) Report on a successful commercialisation*, Lurgi AG, 2007.
29 Aspen Technology, Inc., *Aspen Plus, V14 (40.0.0.359)*, 2022.
30 F. Bisotti, M. Fedeli, K. Prifti, A. Galeazzi, A. Dell'Angelo and F. Manenti, *Ind. Eng. Chem. Res.*, 2022, **61**, 2206–2226.
31 B. Bozorgi, J. Ahmadpour, A. Mohammad-khah, F. Yaripour and H. Z. Mousavi, *Solid State Sci.*, 2024, **147**, 107382.
32 M. Vares, A. Sari and F. Yaripour, *Fuel*, 2025, **383**, 133861.
33 F. Yaripour, Z. Shariatinia, S. Sahebdelfar and A. Irandoukht, *Microporous Mesoporous Mater.*, 2015, **203**, 41–53.
34 S. Xu, Y. Zhi, J. Han, W. Zhang, X. Wu, T. Sun, Y. Wei and Z. Liu, Advances in catalysis for methanol-to-olefins conversion, in *Advances in Catalysis*, Academic Press, 2017, ch. 2, vol. 61, pp. 37–122.
35 N. Narita, M. Sagisaka and A. Inaba, *Int. J. Life Cycle Assess.*, 2002, **7**, 277–282.
36 S. R. Nicholson, N. A. Rorrer, A. C. Carpenter and G. T. Beckham, *Joule*, 2021, **5**, 673–686.
37 PlasticsEurope, *Polypropylene (PP) December 2016 Update*, 2016.
38 S. L. Nordahl and C. D. Scown, *Chem. Sci.*, 2024, **15**, 9397–9407.
39 National Institute of Advanced Industrial Science and Technology, *Inventory Database for Environmental Analysis (IDEA), 3.3.0*, 2024.
40 T. Otsuki, N. Kishimoto, M. Nabeshima, M. Hirano, E. Sakagami, H. Sasa, H. Yamanaka, T. Aki, R. Fujii, R. Kawamoto and M. Ohashi, *The Electric Power Industry in Japan*, Japan Electric Power Information Center, Inc., 2024.
41 S. Honma and J.-L. Hu, *J. Cleaner Prod.*, 2021, **284**, 125274.
42 T. S. D. K. Chosa-tokeibu, Yearbook of Current Production Statistics (Chemical Industry), Research and Statistics Department, Minister's Secretariat, the Ministry of Economy, Trade and Industry (METI): Tokyo, Japan, 2017.
43 R. Turton, R. C. Bailie, W. B. Whiting, J. A. Sheaiwitz and D. Bhattacharyya, *Analysis, Synthesis, and Design of Chemical Processes*, Prentice Hall, Tokyo, 4th edn, 2012.
44 CEPCI, *Chemical Engineering*, 2024, p. 72.
45 B. Caudle, T. T. H. Nguyen and S. Kataoka, *Green Chem.*, 2025, **27**, 1667–1678.
46 R. N. Walters, S. M. Hackett and R. E. Lyon, *Fire Mater.*, 2000, **24**, 245–252.
47 M. Larrain, S. Van Passel, G. Thomassen, B. Van Gorp, T. T. Nhu, S. Huysveld, K. M. Van Geem, S. De Meester and P. Billen, *Resour., Conserv. Recycl.*, 2021, **170**, 105607.
48 S. L. Nordahl, N. R. Baral, B. A. Helms and C. D. Scown, *Proc. Natl. Acad. Sci. U. S. A.*, 2023, **120**, e2306902120.
49 S. A. Stoian, A. R. Gabor, A.-M. Albu, C. A. Nicolae, V. Raditoiu and D. M. Panaitescu, *J. Therm. Anal. Calorim.*, 2019, **138**, 2469–2480.
50 J. M. Layman, D. I. Collias, H. Schonemann and K. Williams, *United States Pat*, 2018/0171094 A1, 2018.
51 J. M. Layman, M. Gunnerson, E. B. Bond, H. Schonemann and K. Williams, *United States Pat*, 2017/0002119 A1, 2017.
52 B. Parkinson, P. Balcombe, J. F. Speirs, A. D. Hawkes and K. Hellgardt, *Energy Environ. Sci.*, 2019, **12**, 19–40.