Environmental Science Advances

ROYAL SOCIETY OF CHEMISTRY

PAPER

View Article Online
View Journal | View Issue

Open Access Article. Published on 03 January 2025. Downloaded on 12/1/2025 9:35:42 PM.
This article is licensed under a Creative Commons Attribution-NonCommercial 3.0 Unported Licence.

Check for updates

Cite this: *Environ. Sci.: Adv.*, 2025, **4**, 648

Quantification and modelling of methane and carbon dioxide surface emissions from a South African landfill†

P. O. Njoku, *[a] S. Piketh,[b] R. Makungo[c] and J. N. Edokpayi[c]

Landfill gas (LFG) emissions, primarily CH_4 and CO_2, result from decomposing organic waste in landfills. South Africa faces challenges in managing LFG emissions and effectively handling landfill sites. For this study, a static flux chamber was used to sample CH_4 and CO_2 emissions. The study showed that CH_4 emissions in the capped area had a concentration of 360 819.80 mg m^{-3}, with an average emission rate of 433.00 g per m^2 per day, resulting in 6363.43 Mg per year during the wet season. The active area was observed to have emitted the highest CH_4 concentration (419 863 mg m^{-3}) when compared to other areas of the landfill. The lowest CH_4 concentration (45 922.52 mg m^{-3}) was emitted from the virgin area. From the virgin area, an average emission rate of 55.11 g per m^2 per day, resulting in 605.72 Mg per year, was recorded. Similar results based on the sample area variations were also observed during the dry season. Specifically, the active and capped sample area experienced higher CH_4 emissions than the leachate and virgin sample areas. Furthermore, it was observed that the concentrations and emission rates of LFGs emitted during the dry season were lower when compared to the wet season. Similarly, the concentration of CO_2 emissions was higher during the wet season than during the dry season. Enhanced control methods are recommended to improve LFG management practices, especially during the wet season when emissions are higher. Highlighting seasonal variability in emissions underscores the need for targeted strategies to mitigate environmental and health risks. Quantifying LFG emissions from the Thohoyandou landfill in this study sheds light on the environmental and health risks involved. The data presented are crucial for improving landfill management practices in South Africa and for validating the LandGEM model with field-measured and laboratory-analyzed data.

Received 2nd August 2024
Accepted 28th December 2024

DOI: 10.1039/d4va00302k

rsc.li/esadvances

Environmental significance

This study elucidates the substantial emission of methane (CH_4) and carbon dioxide (CO_2) from the Thohoyandou landfill, underscoring the environmental and health hazards associated with landfill gas (LFG) emissions in South Africa. Through the measurement of CH_4 and CO_2 emissions in various landfill zones and seasons, our results emphasize the necessity for enhanced landfill control methods. The increased emissions during the rainy season suggest seasonal fluctuations in LFG emissions, which are crucial for devising effective mitigation plans. This study offers essential data for validating the LandGEM model using real-time data, aiding in the more efficient and knowledgeable management of landfill sites to minimize environmental consequences and protect public health.

1. Introduction

Landfills are significant sources of GHG emissions, primarily due to the decomposition of organic waste. LFG is primarily composed of CH_4, CO_2, and other pollutants.[1] CH_4, a potent GHG, has over 25 times the warming potential of CO_2 over a century.[2] Proper waste management, including recycling and reducing organic waste in landfills, can reduce LFG emissions.[3] CO_2, though less potent in the short term, is still a significant contributor to GHG emissions from landfills, gradually accumulating in the atmosphere.[4] Landfills pose health and environmental risks, including litter, dust, rodent infestations, and fires.[5–7] Uncontrolled LFG migration can lead to fires, impacting nearby communities.[8,9] Several recent landfill fires have occurred in South Africa.[10,11] This has led researchers and various stakeholders worldwide to conduct studies to quantify LFG emissions.[12–14] This is to address and mitigate the environmental and public health challenges associated with landfills. Monitoring and quantification of surface LFG emissions are crucial for environmental protection and require the

[a]Department of Geography and Environmental Sciences, Faculty of Science, Engineering and Agriculture, University of Venda, Thohoyandou, 0950, South Africa
[b]Climatology Research Group, Unit of Environmental Science and Management, North-West University, Potchefstroom, 2531, South Africa
[c]Department of Earth Sciences, Faculty of Science, Engineering and Agriculture, University of Venda, Thohoyandou, 0950, South Africa

† Electronic supplementary information (ESI) available. See DOI: https://doi.org/10.1039/d4va00302k

© 2025 The Author(s). Published by the Royal Society of Chemistry

Open Access Article. Published on 03 January 2025. Downloaded on 12/1/2025 9:35:42 PM.
This article is licensed under a Creative Commons Attribution-NonCommercial 3.0 Unported Licence.

attention of scientists and policymakers to develop effective strategies for reduction.

The Thohoyandou landfill presents a significant environmental and public health concern and currently lacks an LFG monitoring system. Establishing such a system to monitor and quantify LFG emissions at this landfill is critical for effective environmental protection in the South African context. The specific data collected through this monitoring will play a pivotal role in shaping policies and strategies for landfill management, LFG control, and waste management practices. This, in turn, becomes a crucial step toward mitigating the adverse impacts of landfills on both the environment and the well-being of humans, especially those residing or working in Thohoyandou city.

Recent advancements in LFG research have led to diverse methodologies for quantifying and managing these emissions. These approaches range from experimental techniques to numerical modeling, each contributing to a better understanding of landfill gas dynamics.[15] Gallego *et al.*[15] employed an inverse methodology to determine emission factors by analyzing ambient air concentrations of VOCs, H_2S, and NH_3 at various landfill sites. This involved using multi-sorbent beds and passive samplers, revealing significant emission profiles that are crucial for effective landfill management. Stadler *et al.*[16] focused on quantifying methane emissions using static chamber techniques and tracer methods. Their findings indicated that landfill surfaces could act as methane sinks, while gas vents exhibited substantial emissions, highlighting the need for improved infrastructure to mitigate these emissions.

Datta *et al.*[17] reviewed advancements in landfill gas recovery, integrating numerical and biochemical methods to enhance gas efficiency and safety. This approach aims to address the challenges of harmful gas management while promoting landfill gas as a renewable energy source. Khaleghi *et al.*[18] utilized truck-based measurements and Lagrangian modeling to identify methane hotspots across Canadian landfills. Their comprehensive approach provided valuable data for regulatory improvements in the waste sector. While these methodologies show promise in managing landfill gas emissions, challenges remain, particularly in the adoption of advanced technologies and the need for consistent regulatory frameworks to support these innovations.

Furthermore, to quantify the LFG emissions in this study, a static flux chamber has been widely used and validated by several scholars.[19–21] This flux chamber involves using a closed chamber, typically cylindrical or square-shaped and impermeable to the gas being measured, placed over the landfill surface. The chamber is sealed to prevent gas exchange with the surrounding atmosphere, creating a closed system. Gas concentrations inside the chamber are monitored over time to calculate the gas flux.[21] This static flux was employed to assess CH_4 and CO_2 emissions from the Thohoyandou landfill, followed by analysis using a thermal desorption-gas chromatography/mass spectrometry (TD-GC/MS) system. While previous research has contributed valuable insights into the LFG emissions across developed nations, there is still a significant need for further studies on quantifying LFG emissions from South African landfills, with a specific focus on the Thohoyandou landfill as a case study. There are limited data on the surface emission of LFGs from landfills in South Africa. This study aims to quantify the LFG fluxes from the Thohoyandou landfill site, building upon the earlier research conducted by Njoku *et al.*[22] Njoku *et al.*[22] utilised specifically the LandGEM and Afvalzorg models to estimate CH_4 and CO_2 emissions from the Thohoyandou landfill site. Using standard parameters from the literature for LFG emissions can be misleading due to local factors like climate and waste management practices. Determining site-specific LFG emissions should be considered to improve model accuracy. Site-specific data are crucial for reliable LFG emission modelling. In this study, the comparison of the result using the flux chamber and the LandGEM model was achieved.

The results from this study showed site-specific insights that are not captured in broader or generalised studies. This local approach enhanced the relevance and applicability of the findings, especially for stakeholders involved in managing the Thohoyandou landfill. Also, through the assessment of inefficiencies in current landfill management practices, particularly regarding cap design and waste accumulation, the study highlights opportunities for improvement in LFG control and mitigation in the Thohoyandou landfill. These improvements are crucial and should be addressed to avoid illnesses, premature death, and environmental destabilisation. This study addresses important research gaps, including the lack of site-specific data for South African landfills, which hinders accurate assessment and management of LFG emissions. Additionally, it highlights the need for experiential validation of the LandGEM model with present data, providing a more reliable tool for predicting and mitigating emissions in South African contexts. The main objectives of this study are to quantify the CH_4 and CO_2 emissions from the Thohoyandou landfill, analyze the seasonal variations in these emissions, and validate the LandGEM model using present-time data. These objectives aim to improve our understanding of landfill gas dynamics and enhance the accuracy of emission predictions in South African landfills.

2. Materials and methods

2.1 Study area

The Thohoyandou landfill, located in the Thulamela Municipality, Limpopo Province, South Africa, serves as the primary waste disposal site for the region. It is situated near Thohoyandou town and has been operational since 2004 under a permit allowing only general, non-hazardous waste. The landfill receives approximately 79 888 tonnes of waste yearly and has a proposed closure year of 2030. It is in a region with an average annual rainfall of 752 mm and a temperature of 22.64 °C. The cover material in the landfill mainly consists of rubble and construction materials. The landfill receives MSW, including household waste, organic material, plastics, and construction debris, with no hazardous waste allowed. Waste management practices are limited, with no recycling, waste sorting, or LFG collection systems in place. Efforts to improve management include plans for a weighbridge and LFG

Open Access Article. Published on 03 January 2025. Downloaded on 12/1/2025 9:35:42 PM.
This article is licensed under a Creative Commons Attribution-NonCommercial 3.0 Unported Licence.

Fig. 1 Map of Thohoyandou showing the sampling sections. Source: Google Earth Pro.

monitoring station, but challenges remain due to inadequate infrastructure and resource limitations, leading to uncontrolled methane emissions.

The Thohoyandou landfill was subdivided into four areas, which include *A* (capped areas), *B* (active area), *C* (leachate) and *D* (virgin areas), as shown in Fig. 1. The use of static flux chambers has limitations in terms of not providing comprehensive coverage of the entire landfill area, and it may not effectively address the variability in emissions across the entire surface area of the landfill.[23] However, to mitigate this constraint, a systematic sampling strategy was employed, aiming to collect data from all four designated regions within the landfill. The data collection strategy involved the application of kriging interpolation methods to obtain measurements representative of the entire landfill area.[12,24]

Sample area *A* (capped area) – the capped area of the landfill refers to a section of the landfill that has been covered with topsoil (clay and construction rubble) permanently. This is because the cells in that area are full and no longer receive waste. The topsoil is designed to create a barrier that minimises the migration of gases vertically into the atmosphere.

Sample area *B* (active area) – the active area in the landfill refers to the area of the landfill that has not yet been covered with a final topsoil, unlike sample area *A*. This area is typically still active and receives new MSW daily.

Sample area *C* (leachate area) – the leachate area of the landfill refers to the portion of the landfill where liquid waste (leachate) is stored, collected, and managed.

Sample area *D* (virgin area) – this section of the landfill remains unused for waste disposal purposes. As such, it does not show any accumulation or activity related to waste disposal. However, certain activities do take place in this area. Reclaimers at the landfill utilise it as a storage space for recyclable waste collected from waste piles. Additionally, the offices of the landfill are situated in this area.

2.2 Quantification of LFG using LandGEM

The LandGEM model was used to model the LFG surface emission because of its ability to model diverse LFGs including CH_4, CO_2, and VOCs/HAPs. The VOC/HAP emission results are important because these gases are very dangerous and can cause severe health challenges if inhaled. Surface emission data of VOCs/HAPs obtained from LandGEM were used in the assessment of the potential health risk (carcinogenic and noncarcinogenic) of the residents living closer to the landfill. First, the LandGEM results were calibrated or validated using the field-measured and laboratory-analyzed data derived from the flux chamber sampling technique in this chapter. The LandGEM (Version 3.02) LFG emission model was created by the U.S. Environmental Protection Agency (EPA) in September 1998. This computational model served the purpose of quantifying emissions encompassing total LFG, CO_2, CH_4, non-methane organic compounds (NMOCs), and additional airborne pollutants discharged from landfill sites. The model's foundational framework revolves around the utilisation of a first-order decomposition reaction rate, which provides the foundation for assessing LFG emissions. This fundamental equation, presented as eqn (1), is the key building block used to estimate LFG emissions within the LandGEM system.[22]

$$Q_{CH_4} = \sum_{i=1}^{n} \sum_{j=0.1}^{1} kL_0 \left(\frac{M_1}{10}\right) e^{-kt_{ij}} \quad (1)$$

where Q_{CH_4} = estimated annual CH_4 generation in the year of the calculation (Mg per year); i is the increment in one year time; n is (year of the calculation) – (initial year of waste

 © 2025 The Author(s). Published by the Royal Society of Chemistry

Open Access Article. Published on 03 January 2025. Downloaded on 12/1/2025 9:35:42 PM.
This article is licensed under a Creative Commons Attribution-NonCommercial 3.0 Unported Licence.

Table 1 Values of DOC in the Southern African region based on standard settings from the IPCC's default parameters, as adapted in the Afvalzorg and IPCC landfill gas model

DOC (by weight wet basis)	Default	Range
Food waste	0.15	0.08–0.20
Garden waste	0.20	0.18–0.22
Bulk MSW	0.20	0.12–0.28
Sewage sludge	0.05	0.04–0.05
Industrial waste	0.15	0–0.54

acceptance); j is the increment in 0.1 year time; k is methane generation rate (year); L_0 is the potential methane generation capacity (m^3 Mg^{-1}); M_i is the mass of waste accepted in the ith year (Mg); ti_j is the age of the jth section of waste mass M_i accepted in the ith year.

To use the model, an initial reconnaissance survey was conducted to understand the landfill's operational dynamics and assess the potential feasibility of generating a substantial amount of LFG for potential utilisation. Subsequently, data on the amount of waste deposited in the landfill were sourced from both the local municipality and the South African Waste Information Center (SAWIC).

The input data for the LandGEM include the quantity of MSW deposited at the landfill, the year of commencement of landfill operations, the landfill's designed full capacity, and the composition of waste deposited within the site. Additionally, the parameters were estimated utilising context-specific values of South Africa in conjunction with default values established by the IPCC. These parameters are included.

The degradable organic carbon (DOC) values are shown in Table 1.[25] The potential CH_4 generation capacity (L_0) for the Thohoyandou landfill is influenced by site-specific factors like the high organic waste content, warm climate, and limited waste management practices. These factors accelerate waste decomposition, increasing CH_4 production. The lack of LFG collection systems further amplifies the need for accurate L_0 estimation to predict CH_4 emissions effectively. The L_0 value, CH_4 correction factor (MCF) for managed anaerobic landfill conditions, and the degradation constant (k) were derived from the default values presented in the LandGEM model. The k value is influenced by several factors; a high proportion of organic waste, warm temperatures, and significant rainfall accelerate microbial activity and the waste decomposition rate. These conditions lead to a higher degradation constant (k), as waste breaks down more quickly, increasing CH_4 generation. The absence of advanced waste management practices further impacts the k value, making it crucial to adjust the k value to reflect the faster decomposition specific to the Thohoyandou landfill.

2.3 Quantification of LFG using the flux chamber

The static flux chamber employed in this research was designed using a robust ceramic PVC material, incorporating a sharpened base to effectively prevent any gas leakage from within the chamber, as illustrated in Fig. 2 and 3.

The design of the flux chamber was informed by the methodology adopted in prior research carried out by Bhaillall (2015).[26] During the installation phase, the flux chamber was carefully inserted into the ground, with a penetration depth of approximately 3 to 5 cm. The connection between the flux chamber and the associated canister was established, with the chamber then positioned on the surface of the landfill, allowing for an approximate 2 hour exposure period. Initially, the 2 hour duration was designated for the flux chamber-canister installation phase. However, upon subsequent laboratory analysis, it became evident that the quantity of gas accumulated within the canisters was insufficient for comprehensive analysis. This shortfall in gas volume was attributed to the insufficient pressure exerted by the gases, thereby hindering their effective entry into the canister. Consequently, an alternative method was used, involving an extension of the gas collection time from the flux chamber to a duration of 24 hours, during which no external disturbances were introduced. Unfortunately, this adjusted approach produced similar results, with only a small portion of LFG composition making its way into the canister. This was observed when the gas samples were taken to the laboratory for analysis. To address this limitation, manual

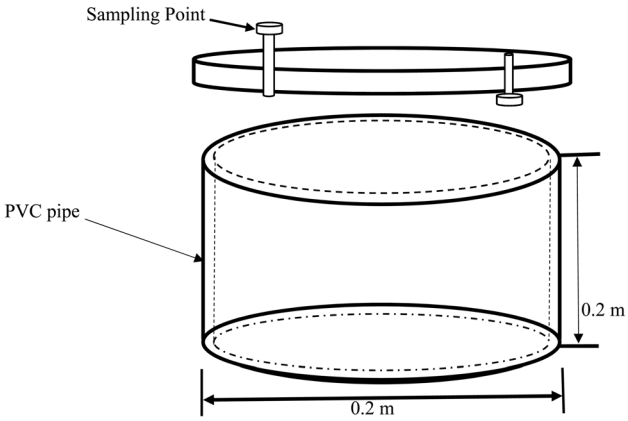

Fig. 2 A schematic diagram showing a simple flux chamber.

Fig. 3 The collection of gases using the flux chamber and a handheld pump.

Open Access Article. Published on 03 January 2025. Downloaded on 12/1/2025 9:35:42 PM.
This article is licensed under a Creative Commons Attribution-NonCommercial 3.0 Unported Licence.

pumps were introduced to generate the necessary pressure for transferring the gases from the chamber into the canister. Additionally, the canister was replaced with a Tedlar bag, which was a more suitable storage option for the LFG collected from the chamber.

The flux chamber, now connected to the Tedlar bag, was installed on the landfill surface until a sufficient quantity of gas was accumulated in the bag. In some instances, a manual pump was attached to the outlet of the chamber to facilitate the transfer of gases into the Tedlar bags. This modified approach ensured more effective gas collection and storage during the study, enhancing the reliability and accuracy of subsequent analyses.

A step-by-step method outlining how LFG samples were stored and collected from the landfill for easy replicability.

Step 1: a flux chamber designed using a robust ceramic PVC material, with a sharpened base, was prepared for gas collection. The chamber's design was informed by prior research and optimised to prevent gas leakage.

Step 2: the flux chamber was carefully inserted into the ground at selected sampling points within the landfill, with a penetration depth of approximately 3 to 5 cm.

Step 3: once installed, the flux chamber was connected to a collection canister or Tedlar bag, depending on the specific phase of the study. The chamber was positioned on the surface of the landfill to allow for gas collection.

Step 4: initially, a 2 hour exposure period was designated for the flux chamber-canister setup. However, it was observed that the gas volume collected within the canister was insufficient for comprehensive analysis. To address the shortfall in gas volume, the collection duration was extended to 24 hours, during which no external disturbances were introduced to ensure accurate time sampling. Also, at some point manual pumps were introduced to generate the necessary pressure for transferring gases from the chamber into the collection canister or Tedlar bag. This ensured more effective gas transfer and storage.

Step 5: throughout the gas collection period, the flux chamber setup was continuously monitored to ensure proper functioning and to prevent any potential leaks or disturbances.

Step 6: once a sufficient quantity of gas was accumulated in the collection container, the samples were transported to the laboratory for analysis.

The placement location of each flux chamber at the area of interest in the landfill was specifically chosen using the methods described in the literature by Acker.[12] To determine the number of sampling points, eqn (2) was used

$$\mathrm{SP} \geq 6 + 0.15\sqrt{\text{area of zone}} \tag{2}$$

where SP = number of sampling points and area of zone = total area of the testing location (m^2). Fig. 4 shows the sampling points of the flux chamber. The landfill site comprises a total area of 100 619 m^2, which is divided into four distinct areas for better management and monitoring. The sample area *A* covers a significant portion of the landfill, spanning 40 263 m^2 and a total of 6 representative sampling points from the area. This area represents a substantial part of the overall landfill site. In addition, sample area *B* encompasses a total area of 38 234 m^2 and a total of 6 representative sampling points in the area. Similar to area *A*, this section is considerable in size and plays a vital role in the landfill's operation. Sample area *C* is the third section, covering 25 157 m^2 and a total of 5 representative sampling points in the area. Meanwhile, sample area *D* occupies 30 113 m^2 and a total of 5 sampling points in the area.

The set of samples was collected during the wet season (November–December 2022), which is associated with the hottest months of the year and temperatures ranging from 25 °C to 35 °C. Also, samples were collected in the dry season (June 2022), which is associated with the coldest month of the year and temperatures ranging from 7 to 10 °C in the winter season.

2.4 LFG sample analysis

To quantify the gas flux, continuous measurements of LFG concentrations were collected from the sample port connected to the flux chamber. Gas samples were collected using 50 liter Tedlar gas bags attached to each flux chamber. Within 24 hours

Fig. 4 Landfill area with sampling points (Google Earth Pro).

 © 2025 The Author(s). Published by the Royal Society of Chemistry

Open Access Article. Published on 03 January 2025. Downloaded on 12/1/2025 9:35:42 PM.
This article is licensed under a Creative Commons Attribution-NonCommercial 3.0 Unported Licence.

Fig. 5 The analysis of the gases collected from the Thohoyandou landfill site.

of gas collection, the samples were sent to the laboratory for chemical analysis. The SRI 8610C gas chromatography (GC) instrument was employed to analyse CH_4 and CO_2, using a flame ionisation detector (FID) and a thermal conductivity detector (TCD) (GC-FID, GC-TCD). The SRI 8610C gas chromatography (GC) instrument with a Restek Packed Porapak, 2 mm stainless steel column was utilised for sample analysis (Fig. 5). A 2 mL sample was injected into the GC through an inlet. The carrier gas, helium, was passed through the column at a flow rate of 15 mL min^{-1}. To enable the detection of flow CO_2 concentrations, a methaniser was incorporated into the GC system. The methaniser contained a powdered nickel catalyst and was heated to 380 °C by the FID, while the sample temperature was maintained at 50 °C. Importantly, the conversion of CO_2 to CH_4 occurred after the sample had passed through the column, ensuring that their retention times were not affected. Consequently, during analysis, the first peak represented CH_4, while the latter peak represented CO_2.

To determine the spatial distribution of CH_4 and CO_2 emissions from the landfills, kriging interpolation contour plots were employed. The accuracy of gas concentrations was limited to the monitoring probes, while values in other areas are interpolated using the grid feature of Surfer software. Surfer, a grid-based contour program, facilitated data interpolation on a regular grid using the *XYZ* data file, where *X* and *Y* represent the latitudinal and longitudinal coordinates of the monitoring probes, and *Z* represents the gas concentration. This analytical approach provided detailed insights into the gas composition and spatial distribution of CH_4 and CO_2 emissions.

2.5 Emission rate calculation

The emission rates of LFG (eqn (3)) were calculated and measured by multiplying the concentration of LFG inside the chamber (in g m^{-3}) with the volume of the chamber (in m^3) to obtain the total amount of LFG emitted. This amount was then divided by the surface area of the site covered by the chamber (in m^2) and the duration of the measurement period (in hours) to obtain the emission rate unit area per unit time (in g m^{-2} h^{-1}).[13]

$$\mathrm{ER} = \frac{\frac{\Delta C_1}{\Delta t_1} V_1}{A} \tag{3}$$

where ER is the emission rate; $\frac{\Delta C_1}{\Delta t_1}$ is the change in concentration with time; V_1 is the volume of the flux chamber; and A is the surface area of the sample area within the landfill.

The total emission rate estimate for the different areas of the landfill was further calculated with units in mass/time. By observing the concentration of CH_4 and CO_2 within the chamber, it becomes possible to compute the CH_4 and CO_2 flux across the covered chamber area annually. The emission rate (g m^{-2} h^{-1}) is multiplied by the total landfill area, and then the measurement in g h^{-1} is converted into Mg per year.[27]

2.6 Model calibration

The model calibration analysis was conducted to validate the results derived from the LandGEM model and make it more reliable and representative of the field-measured and laboratory-analyzed measurements. The comparison was between the modelled result (LandGEM) and actual results (static flux chamber).

Tables 2 and 3 show the yearly waste disposal and the input data for the different scenarios that were imputed into the LandGEM model, respectively. A sensitivity analysis was conducted to determine the most appropriate k and L_0 values to be used for the LandGEM model. The objective of this calibration process was to align the predicted LFG generation simulated by the LandGEM model with the actual average measured CH_4

Table 2 MSW deposited at the Thohoyandou landfill site from 2005 to 2022[a]

Years	Population	Waste deposited (tonnes)
2005	595 809	56 072*
2006	599 526	56 414*
2007	603 267	56 759*
2008	607 030	57 109*
2009	610 817	57 463
2010	614 628	70 666
2011	618 462	92 637
2012	622 296	104 617
2013	626 155	97 967
2014	630 037	210 000
2015	633 943	298 705.9
2016	637 874	83 719
2017	641 828	44 703.6
2018	645 801	33 893.8
2019	649 806	37 396.7
2020	653 835	9758.5
2021	657 889	39 031.1
2022	661 968	50 175.0

[a] * shows the expected amount of waste deposited in the landfill, while the amount of waste deposited from year 2009 to 2022 was obtained from the SAWIC.

Open Access Article. Published on 03 January 2025. Downloaded on 12/1/2025 9:35:42 PM.
This article is licensed under a Creative Commons Attribution-NonCommercial 3.0 Unported Licence.

Table 3 Input parameters for all scenarios during the LandGEM calibration with varying k and L_0 values

Data	First scenario	Second scenario	Third scenario	Fourth scenario	Fifth scenario	Sixth scenario
Landfill commenced operation	2005	2005	2005	2005	2005	2005
Proposed closure year of landfill operation	2030	2030	2030	2030	2030	2030
Degradation constant k (per year)	0.05	0.1	0.18	0.18	0.18	0.18
Methane generation capacity L_0 (m^3 mg^{-1})	170	170	170	200	210	220
Methane concentration (%)	50	50	50	50	50	50
Years of waste deposition in the landfill	2005–2022	2005–2022	2005–2022	2005–2022	2005–2022	2005–2022

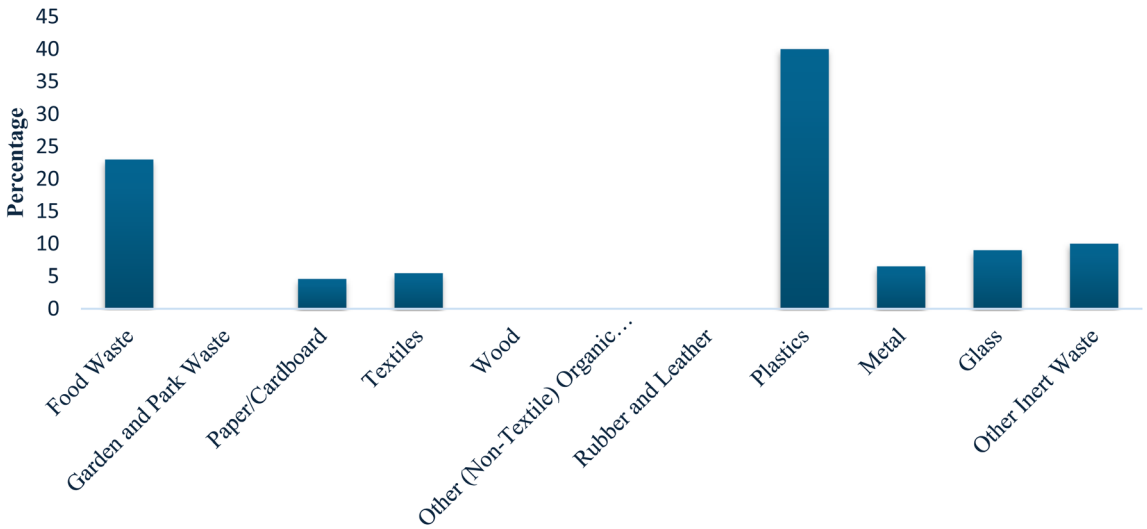

Fig. 6 Pie chart showing the average annual composition of waste present in the Thohoyandou landfill (source: adapted from Nefale[30] and SAWIC website).

generation data for the year 2022. This will ensure the reliability, consistency, and accuracy of the LandGEM model.

The input data for both models are summarised in Tables 2 and 3. The total amount of waste deposited in the landfill was obtained from the information provided on the SAWIC website and records from the landfill. Eqn (4) was used to estimate the potential waste generated in the area based on the potential population size for both landfills. The results were applied in this study to fill in the missing data that were not acquired from the SAWIC and municipalities.

According to the 2011 population census statistics, Thulamela municipality has a population of 618 462 people. Also, the waste deposited in the landfill in 2011 was 92 637 tonnes per year. Therefore, at a 0.62% growth rate, the past waste generated was estimated using eqn (4).[28]

$$\text{Past}_g = \text{present}_g\,(1 - in) \tag{4}$$

Past_g = past waste generation; present_g = present waste generation; i = rate of population growth, which is 0.62%; n = period of year, based on the 2011 population census for Thulamela municipality, which recorded 618 462 people.[29] Table 2 shows the amount of waste deposited in the Thohoyandou landfill.

Furthermore, Fig. 6 shows the waste composition in the Thohoyandou landfill.

It is important to indicate that 10% of the total composition of solid waste deposited in the Thohoyandou landfill is considered to be inert waste and it includes sand, ceramics, tiles, gravels, and bricks. Thus, only 90% of the total waste deposited in the landfill was imputed in the LandGEM model.

Methane oxidation will be considered at 0.1 or 10% for this study using the U.S. EPA GHG inventory default parameter. Methane oxidation estimates can vary significantly. Over the years, the U.S. EPA GHG inventory used a default value of 10% for the oxidation of uncollected methane. Recently, this was revised to a range of 10% to 35%, depending on the specific methane flux passing through the landfill's soil cover.[31,32]

3. Results and discussion

3.1 CH_4 and CO_2 surface emission results for the year 2022 during the wet and dry seasons obtained using the closed flux chamber

Table 4 shows the summarised results of the analysis of CH_4 gas emissions using the flux chamber obtained from the four distinct sample areas during the wet and dry seasons of 2022.

 © 2025 The Author(s). Published by the Royal Society of Chemistry

Open Access Article. Published on 03 January 2025. Downloaded on 12/1/2025 9:35:42 PM.
This article is licensed under a Creative Commons Attribution-NonCommercial 3.0 Unported Licence.

Table 4 Average CH_4 surface emission rate for the year 2022

Sample areas	Surface emission rate for the wet season			Surface emission rate for the dry season		
	Concentration (mg m^{-3})	Average emission rate (g per m^2 per day)	Annual emission rate (Mg per year)	Concentration (mg m^{-3})	Average emission rate (g per m^2 per day)	Annual emission rate (Mg per year)
A (capped area)	$3.6 \times 10^5 \pm 1.8 \times 10^5$	$4.3 \times 10^2 \pm 2.2 \times 10^2$	$6.4 \times 10^4 \pm 3.2 \times 10^3$	$23.0 \times 10^5 \pm 7.5 \times 10^4$	$3.5 \times 10^2 \pm 9.0 \times 10^1$	$5.2 \times 10^3 \pm 1.3 \times 10^3$
B (active area)	$4.2 \times 10^5 \pm 6.1 \times 10^4$	$5.0 \times 10^2 \pm 7.3 \times 10^1$	$7.0 \times 10^3 \pm 1.0 \times 10^3$	$3.3 \times 10^5 \pm 1.1 \times 10^5$	$3.9 \times 10^2 \pm 1.3 \times 10^2$	$5.5 \times 10^3 \pm 1.8 \times 10^3$
C (leachate area)	$1.2 \times 10^5 \pm 2.4 \times 10^3$	$1.4 \times 10^2 \pm 2.87$	$1.3 \times 10^3 \pm 2.6 \times 10^1$	$6.6 \times 10^4 \pm 4.9 \times 10^3$	$7.9 \times 10^1 \pm 5.9$	$7.210^2 \pm 5.5 \times 10^1$
D (virgin area)	$4.6 \times 10^4 \pm 1.3 \times 10^3$	$5.5 \times 10^1 \pm 1.50$	$6.1 \times 10^2 \pm 1.6 \times 10^1$	$3.3 \times 10^4 \pm 1.1 \times 10^3$	$3.9 \times 10^1 \pm 1.4$	$4.3 \times 10^2 \pm 1.5 \times 10^1$

Table 4 shows that during the wet season, CH_4 emissions consistently exhibit higher rates compared to the dry season across the sample areas. This suggests that environmental conditions during the wet season, such as increased moisture content and possibly higher temperatures, may have contributed to higher rates of anaerobic decomposition and consequently higher CH_4 emissions. This seasonal trend aligns with common expectations in landfill environments. The wet season, which generally occurs from November to February in South Africa, signifies the hottest months of the year (summer months). The increased moisture content during the wet season can significantly impact CH_4 emissions. The percolation of precipitation in the landfill provides an ideal setting for enhanced microbial activity. This heightened microbial activity will promote the decomposition of organic waste, ultimately increasing CH_4 production.[20] Also, the increased moisture levels restrict the availability of oxygen, creating anaerobic conditions. As noted in previous studies, CH_4 production is favored under anaerobic conditions, where oxygen is absent.[32] The increased precipitation also increases the generation of leachate, as supported by research from Wang *et al.*[33] The leachate acts as a carrier for dissolved organic compounds and nutrients, thereby nourishing the methanogenic microbial community. This alignment with optimal temperature conditions facilitates the methanogenic microbial activity, further promoting CH_4 production. Methanogenic activities are optimised in areas of higher temperature, thereby producing more methane bacteria that contribute to increased CH_4 emissions. The relationship between temperature, moisture, and microbial communities plays a crucial role in driving CH_4 production rates.[34]

In both wet and dry seasons, sample areas *A* and *B* show higher variability in concentration and emission rates compared to sample areas *C* and *D*. This suggests more fluctuation and diverse measurements in sample areas *A* and *B*, pointing to potential environmental differences and disturbances prevailing between these areas. Sample areas *C* and *D* display relatively lower variability in their measurements across the wet and dry seasons. The high CH_4 emissions observed in the capped area, despite the permanent topsoil cover, suggest that the topsoil barrier may not be effectively mitigating vertical LFG migration. Studies indicate that compromised caps or design flaws can allow CH_4 to escape, leading to higher emissions.[35–38] Wang *et al.*[38] found that using a high-density polyethylene (HDPE) membrane as a cap achieved a CH_4 retention rate of 99.8% (a mean flux of 0.288 g per m^2 per day), compared to an air-permeable open windrow composting (OWC) surface with a CH_4 mean flux of 142.40 g per m^2 per day. The HDPE membrane's tight particle packing prevented LFG passage. However, the Thohoyandou landfill's cover material appears to have loose particles, leading to higher CH_4 emissions. Also, Ng *et al.*[39] demonstrated that increased moisture content and temperature can exacerbate CH_4 generation and surface emissions from landfills.

Sample area *B* is known for a high influx of organic waste, which introduces a steady source of decomposable matter. As more waste accumulates, more organic material is available for decomposition, leading to higher CH_4 production. The

Open Access Article. Published on 03 January 2025. Downloaded on 12/1/2025 9:35:42 PM.
This article is licensed under a Creative Commons Attribution-NonCommercial 3.0 Unported Licence.

Table 5 Average CO_2 emission rate (g per m^2 per day) for the year 2022

Wet season				Dry season		
Sample areas	Concentration (mg m^{-3})	Mean emission rate (g per m^2 per day)	Annual emission rate (Mg per year)	Concentration (mg m^{-3})	Mean emission rate (g per m^2 per day)	Annual emission rate (Mg per year)
A	576 002.90 ± 65 868.81	691.24 ± 79.05	10 158.46 ± 1161.67	558 002.80 ± 23 518.99	669.64 ± 28.22	9841.03 ± 414.78
B	630 003.20 ± 60 895.27	756.04 ± 73.08	10 550.85 ± 1019.83	594 003 ± 58 054.99	712.84 ± 69.67	9947.97 ± 972.26
C	162 000.80 ± 6487.70	194.41 ± 7.79	1785.13 ± 71.49	126 000.60 ± 6513.48	151.21 ± 7.82	1388.46 ± 71.78
D	90 000.45 ± 540 002.7	108.01 ± 648.06	1187.16 ± 7122.98	54 000.27 ± 1307.48	64.80 ± 1.57	712.23 ± 17.24

continuous source of organic material in this region results in higher CH_4 emissions during the wet season. Similar results were observed in the study of Stark and Newman.[36]

In the leachate area (*C*) of the Thohoyandou landfill, LFG emissions are relatively lower. Leachate is collected and directed into a settling pond in this area, but there are no liners to prevent ground penetration. Occasionally, the leachate is recirculated within the landfill or taken to the wastewater treatment plant for disposal. Additionally, the leachate is used to wet the ground for dust suppression. This management strategy helps reduce liquid waste accumulation and limits its interaction with organic matter, which may slow down the CH_4 generation process. Scientific findings indicate that proper isolation of leachate areas from other landfill sections and controlled collection of leachates can reduce the escape of CH_4 and other gases, limiting emissions.[33,40]

This virgin area (*D*) has the lowest emissions, which could be a result of the low presence of organic waste material. Unlike the active or capped areas, the virgin area has not yet been used for waste disposal.

A similar trend observed in CH_4 was also observed in CO_2 emissions. Across both seasons, in the capped area (*A*), high CO_2 concentrations were observed, indicating potential limitations in the cap's effectiveness in mitigating gas migration. The active area (sample area *B*) showed elevated CO_2 concentrations, suggesting the highest decomposition rates and CO_2 generation (Table 5). Similarly, the results of Herath *et al.* (2023)[41] showed that the average emission rate of CO_2 from an active Karadiyana MSW dumpsite was 978.65 g per m^2 per day, and total emissions, 519.67 Mg per year, were the highest across the landfill. The leachate area (*C*) displayed lower CO_2 emissions, possibly due to leachate containment measures limiting CO_2 generation. The virgin area (*D*) had the lowest CO_2 emissions, indicating minimal waste decomposition and gas generation.

3.2 Result of the total CH_4 and CO_2 surface emissions using the closed flux chamber

The observed significant variations in LFG emissions within the landfill are attributed to the spatial heterogeneity of the site. To comprehensively assess these differences, a Kriging analysis was conducted, focusing on the mean annual emissions of CH_4 and CO_2 across the entire study area. In Fig. 7 and 8, a distinct separation is evident between the capped and active areas when compared to the leachate and virgin areas. These figures vividly illustrate the predominant hotspots of LFG emissions emanating from the landfill. Notably, this explanation signifies that, during the year 2022, the active and capped areas of the landfill emerged as the primary pathways for LFG emissions.

Conversely, a lower concentration of hotspots is discernible in the leachate and virgin areas. This disparity may be attributed to the dynamic processes occurring within the landfill. In the leachate areas, the dissolution of leachate likely contributes

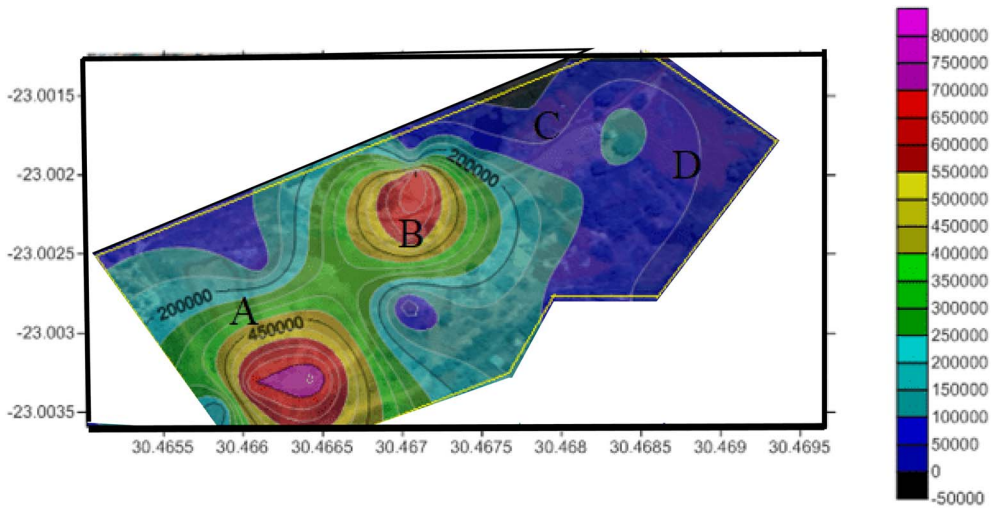

Fig. 7 Spatial variation of CH_4 emissions from the landfill determined using Surfer software.

 © 2025 The Author(s). Published by the Royal Society of Chemistry

Open Access Article. Published on 03 January 2025. Downloaded on 12/1/2025 9:35:42 PM.
This article is licensed under a Creative Commons Attribution-NonCommercial 3.0 Unported Licence.

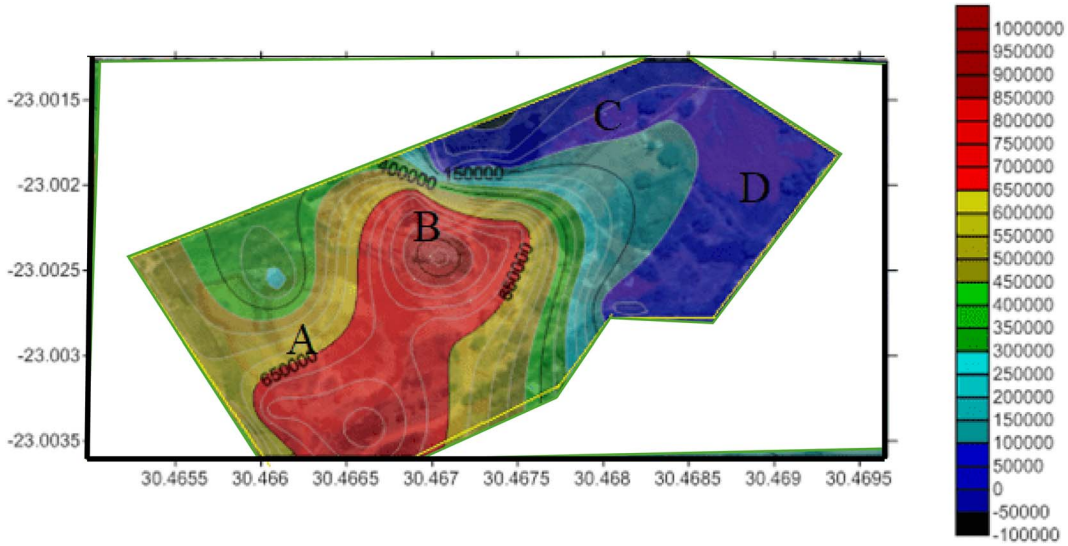

Fig. 8 Spatial variation of CO_2 emissions from the landfill determined using Surfer software.

to the LFG emissions, whereas the virgin areas may serve as conduits for lateral migration of LFG, resulting in fewer pronounced hotspots.

This phenomenon explains the consistency in the spatial distribution of CH_4 and CO_2 emissions, strengthening the credibility of these findings. These results align with existing studies in the field, corroborating the robustness of the current research.[20,42]

In summary, the results shed light on the variability of LFG emissions across different areas within the landfill and how they are influenced by seasonal changes. This enhanced understanding is crucial for developing better management and mitigation strategies to reduce greenhouse gas emissions from landfills. This tailored approach based on localised emission data is unique to this study and provides a valuable tool for landfill operators and environmental managers. Also, in the context of the installation of LFG utilisation technology, there will be a better understanding of how to install LFG collection machinery. Additionally, the observation of high LFG emissions from capped areas despite the presence of topsoil covers explains the need for further research and development of more effective cap systems. This highlights a gap in current landfill management practices and suggests avenues for innovative solutions to minimise gas migration and emissions. Thohoyandou landfill managers and stakeholders can investigate providing a more efficient capping system during the closure of the cells in the landfill. Lower LFG emissions observed in areas with effective leachate management emphasise the significance of proper containment and treatment of landfill leachate. This finding reinforces the importance of integrated leachate management systems in reducing GHG emissions from landfills. The study highlights the seasonal trends of LFG emissions, with wet seasons exhibiting higher emission rates compared to dry seasons. This seasonal variation explains the dynamic nature of LFG production and the need for adaptive management strategies to address seasonal fluctuations.

The uniqueness of these findings lies in their contribution to understanding the specific dynamics of LFG emissions within the context of the Thohoyandou landfill in South Africa. While previous studies may have explored general trends in LFG generation and emissions, this research provides comprehensive insights into the variability of emissions across different areas within the landfill and their response to seasonal changes. This level of specificity is novel and contributes to a more targeted approach to LFG management and mitigation strategies.

3.3 Results from the LandGEM model v302 (sensitivity analysis)

In the sensitivity analysis, the k and L_0 values were the key parameters tested for their impact on CH_4 generation predictions. The sensitivity analysis revealed that both parameters significantly influenced the model outputs.

In the initial modeling of CH_4 generation, a range of k values ranging from 0.05 to 0.18, along with L_0 values ranging from 170 m^3 Mg^{-1} to 220 m^3 Mg^{-1} of waste, were considered. Firstly, during the calibration process, default k and L_0 values of 0.05 and 170 m^3 Mg^{-1} were used. The results showed that CH_4 generation is underestimated when compared to field measurements using flux chambers. Subsequently, after conducting sensitivity tests, a k value of 0.18 was adopted as it yielded CH_4 generation results that closely aligned with field-measured data. This suggests that the waste in the Thohoyandou landfill decomposes more rapidly than initially assumed, likely due to factors like local climate (*e.g.*, higher temperatures and moisture), which accelerate microbial activity. Thus, the k value had a significant impact on the accuracy of the model, highlighting the need to adjust k based on site-specific conditions rather than relying solely on default values. This study's adjustment of the k value from 0.05 to 0.18 through sensitivity analysis is consistent with several prior studies that emphasize the need for region-specific calibration

Open Access Article. Published on 03 January 2025. Downloaded on 12/1/2025 9:35:42 PM.
This article is licensed under a Creative Commons Attribution-NonCommercial 3.0 Unported Licence.

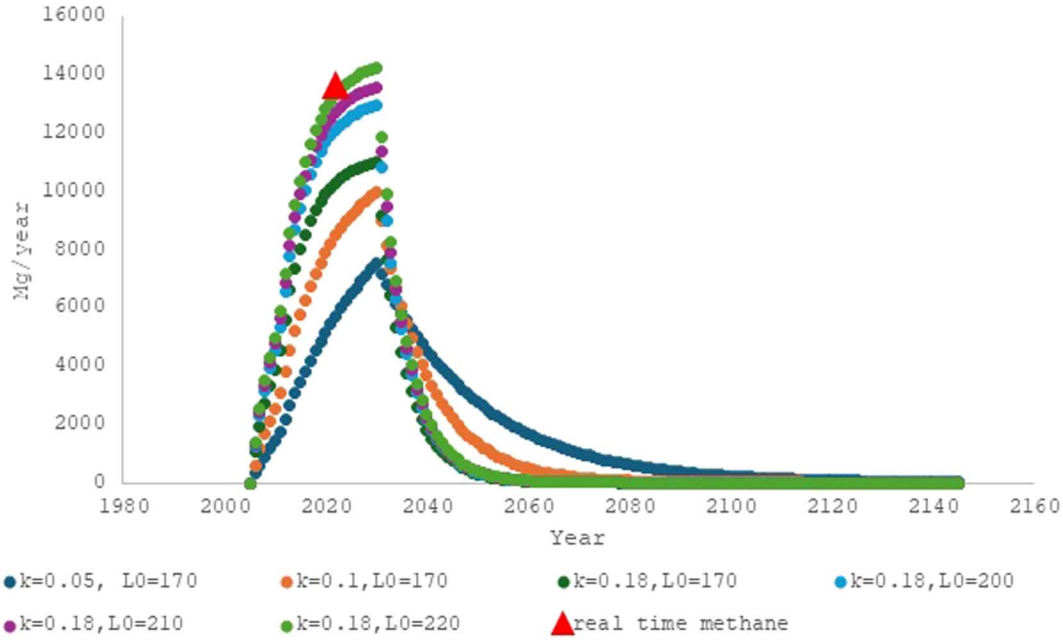

Fig. 9 Annual CH_4 generation with varying k and L_0 values during the calibration process.

of decay rates. For example, Araye *et al.*[43] demonstrated that k values tend to vary significantly based on climate, particularly temperature and moisture content, with higher values associated with warm and humid conditions. Similarly, Wangyao *et al.*,[44] in their study on landfills in tropical climates, found that decay rates are often underestimated when using default values from models designed for temperate regions.

The default L_0 value of 170 m^3 Mg^{-1} for arid conditions was used. During the sensitivity analysis, the field-measured and laboratory-analyzed measurements of CH_4 emissions were compared to CH_4 emission results from LandGEM using L_0 values ranging from 170 to 220 m^3 Mg^{-1}. The results revealed that predicted CH_4 emissions using the L_0 value of 220 m^3 Mg^{-1} align more closely with the actual CH_4 emissions (Fig. 9). This indicates that the L_0 value of the waste in the Thohoyandou landfill is higher than initially assumed. The adjustment of L_0 was crucial, as it directly affects the model's CH_4 output, particularly in terms of the waste composition's organic content. The adjustment of the L_0 value from 170 m^3 Mg^{-1} to 220 m^3 Mg^{-1} in this study shows similar findings in research by Malmir *et al.*,[45] which found that L_0 values are strongly influenced by the organic content of the waste. In their study of landfills in both developed and developing countries, Malmir *et al.*[45] showed that default L_0 values often fail to account for the high variability in waste composition, particularly in regions where organic waste forms a substantial portion of MSW. Similar conclusions were drawn by Sun *et al.*,[46] who demonstrated that higher L_0 values are observed in landfills with elevated levels of organic waste decomposition, especially in humid environments.

The results of this study provide several new insights into L_0 modeling. First, they highlight the importance of considering both local climatic factors and waste composition when determining k and L_0 values. This study adds to the growing body of research indicating that even in regions with moderate rainfall, higher-than-expected CH_4 emissions can occur. This finding challenges the widespread use of default parameters in models like LandGEM, which may not fully capture the variability in methane production across different landfill environments.

Furthermore, the study demonstrates that using higher k and L_0 values, derived from local measurements, leads to better alignment between modeled and measured emissions, a result that has broader implications for landfill management. Sil *et al.*[47] highlighted that improving model accuracy is essential for developing effective methane mitigation strategies, particularly in regions where LFG management infrastructure is limited. The findings from the Thohoyandou landfill suggest that methane generation could be higher than previously estimated, which has important implications for both climate change mitigation and local air quality management.

3.4 Importance of calibrating the LandGEM model

The calibration process of the LandGEM model is essential for refining the accuracy of Thohoyandou LFG generation estimates within the landfill. Landfills in general exhibit considerable variability in waste composition, climate conditions, and operational practices, necessitating adjustments to model parameters for a more default representation of LFG dynamics. By calibrating the model to site-specific conditions, this study enhances its predictive capability, thereby enabling more accurate estimations of the LFG emissions over time. This alignment between model parameters and site-specific characteristics is crucial for effective LFG management strategies and mitigating environmental impacts.

 © 2025 The Author(s). Published by the Royal Society of Chemistry

Open Access Article. Published on 03 January 2025. Downloaded on 12/1/2025 9:35:42 PM.
This article is licensed under a Creative Commons Attribution-NonCommercial 3.0 Unported Licence.

Through the calibration process, model parameters such as k and L_0 were fine-tuned based on comparisons with observed field data or measurements from the landfill site. This validation step serves to validate the reliability of the model in accurately capturing the LFG generation trends within the Thohoyandou landfill context. By assessing the agreement between model predictions and actual data, the author was able to identify any discrepancies or biases, leading to a more robust representation of LFG emission dynamics. Moreover, the calibrated LandGEM provides valuable insights into the effectiveness of LFG recovery and utilisation systems deployed in the Thohoyandou landfills. Accurate LFG generation estimates enable stakeholders to optimise the design and operation of gas collection systems, maximising methane recovery efficiency and energy generation potential. By aligning model predictions with observed LFG emissions, Thohoyandou landfill managers and stakeholders make informed decisions regarding investment in gas recovery infrastructure and emission reduction measures.

3.5 Comparison of results from the field-measured, laboratory-analyzed and modelled surface emissions of CH_4 and CO_2

After the calibration process, the LandGEM model was run to simulate the CH_4 and CO_2 emissions. In the studied landfill, the annual CH_4 emitted increased from 1367.94 Mg per year in late 2006 up to 18 220.05 Mg per year in 2016 (Fig. 10). Also, the CO_2 generation increased similarly from the year 2006 at 3753.3 Mg per year to 49 991.54 Mg per year in 2016. The LFG emitted from the landfill increased as a result of the continuous deposition of waste in the landfill from the opening of the landfill in 2005. Also, a significant increase in the waste deposited in the years 2014 and 2015 was evident in the CH_4 generation from the landfill and the LFG peaked in the year 2016 (Fig. 10). This brought about a significant increase in the LFG generation. This suggests that the more waste that is deposited in the landfill will bring about an increase in the gases generated from the landfill. Using the flux chamber method to measure the LFG in the year 2022, the average total CH_4 and CO_2 emitted from the landfill were 13 578.69 and 22 785.65 Mg per year, respectively.

The comparison between results from the flux chamber measurements and the LandGEM model showed a promising level of agreement. The preliminary findings indicate that both methods produce comparable results after a comprehensive sensitivity analysis. This suggests that the LandGEM model can be a suitable tool for quantifying LFG emissions, particularly under conditions similar to those found at the Thohoyandou landfill site. This outcome aligns with the findings of Capella *et al.*,[48] who also reported favorable results after conducting a comprehensive sensitivity analysis of the LandGEM model. Similarly, Di Bella *et al.*[49] found that the flux chamber method and various modeling approaches demonstrated good consistency. However, it was noted that balance models typically yielded slightly higher LFG production values compared to the flux chamber measurements. The flux chamber method, in particular, stands out as a reliable and user-friendly approach for on-site measurements. Its simplicity and effectiveness make it a practical option for real-time LFG monitoring. Although the LandGEM model can provide useful predictions, it may require calibration and validation against field data, especially for landfills operating under varying environmental and operational conditions. While LFG models and flux chamber methods have shown potential in quantifying LFG emissions, it is essential to recognize the value of continuous validation with field data to refine these models further.

3.7 Limitations

• Flux chambers provide point measurements, which means that the measurements obtained are only representative of the specific area covered by the chamber. The LFG emissions can exhibit significant spatial variability due to differences in waste composition, microbial activity, and gas migration patterns. Therefore, extrapolating chamber measurements to the entire landfill site can lead to inaccuracies.

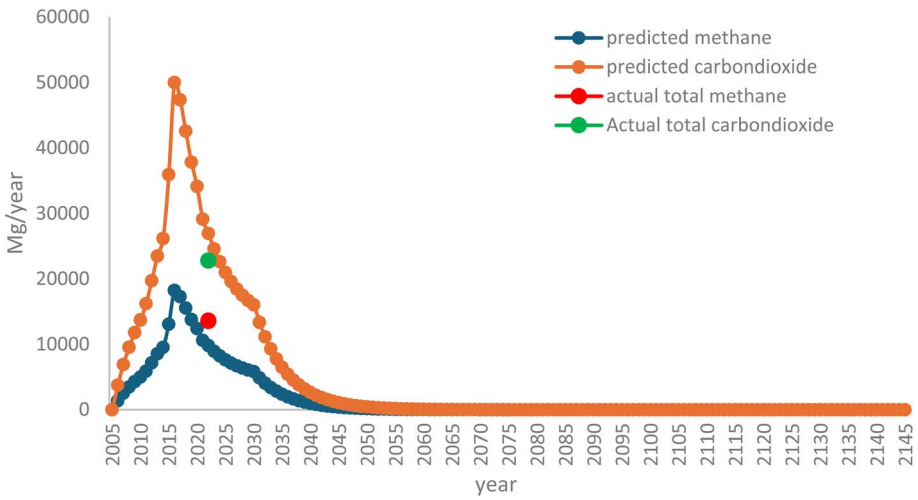

Fig. 10 The annual average CH_4 and CO_2 measured and estimated from the landfill.

Open Access Article. Published on 03 January 2025. Downloaded on 12/1/2025 9:35:42 PM.
This article is licensed under a Creative Commons Attribution-NonCommercial 3.0 Unported Licence.

• The research team was not allowed access to the landfill site during certain periods of the study.

• There were limitations with the collection of the gaseous samples due to low pressure, which brought about the introduction of pumps. If not properly sealed to mitigate the ingress of air, this could affect the integrity of the samples.

• Limitations exist regarding the accuracy and reliability of available waste quantity data for input into the LandGEM model.

4.1 Recommendations

Based on the study's findings, several targeted strategies can be implemented to reduce LFG emissions and improve environmental outcomes.

• Implement LFG capture and utilization systems.
• Introduce site-specific waste management practices.
• Enhanced waste decomposition monitoring.
• Legislation and incentives for organic waste reduction.
• Sensitivity analysis for future landfills.
• Invest in research and development for LFG mitigation.

4.2 Future research areas

• Long-term monitoring of landfill emissions should be done to understand the emissions of LFG.

• Similar studies should be conducted in different landfill settings to achieve comprehensive data on landfill gas emissions.

• Studies should be conducted on the testing of new mitigation technologies.

5. Conclusion

The analysis of CH_4 and CO_2 emissions from the Thohoyandou landfill site provides valuable insights into the dynamics of gas emissions in different sample areas and across seasons. These findings have important implications for landfill management and environmental impact assessment. The study observed the CH_4 emission rate was higher during the wet season than in the dry season. This was as a result of the increase in moisture content from precipitation and the temperature around the landfill area. Sample areas *A* and *B*, characterised by capped landfill and active waste deposition, consistently exhibit the highest CH_4 emissions due to concentrated landfill activities and waste decomposition. Similarly, CO_2 emissions show the same trend as the CH_4 emissions, with higher rates during the wet season. This increase is linked to the presence of moisture, which accelerates the decomposition of organic waste within the landfill. Microbial activity, crucial for waste breakdown, thrives under wet conditions, leading to greater CO_2 production. The decomposition pathways also shift towards aerobic processes under wetter conditions, favoring CO_2 generation over CH_4.

Simulation results from the LandGEM model provide insights into the long-term emissions outlook. The modelled result predicts a peak in CH_4 and CO_2 emissions around 2016, associated with a surge in waste disposal in the preceding year. Using the default parameters for k and L_0 values in the LandGEM model led to an underestimation of LFG emissions. However, calibrating the LandGEM model with site-specific data improved the accuracy of k and L_0 values, resulting in measurements closer to those obtained from the flux chamber. In conclusion, this study highlights the importance of considering seasonal variations and sample area characteristics when assessing gas emissions from landfills. Proper landfill management and cover integrity maintenance during dry seasons are essential for mitigating CH_4 emissions. Additionally, the study highlights the significance of microbial activity and moisture levels in influencing CO_2 emissions. The simulation results from both models offer insights into the long-term emission trends, emphasising the need for continued monitoring and management of LFG emissions to mitigate their environmental impact.

Data availability

Some data for this article, including waste quantity data deposited in the landfill, are available on the SAWIC website at https://sawic.environment.gov.za/index.php?menu=15.

Conflicts of interest

There are no conflicts to declare.

References

1 P. O. Njoku, J. O. Odiyo, O. S. Durowoju and J. N. Edokpayi, A review of landfill gas generation and utilisation in Africa, *Open Environ. Sci.*, 2018, **10**, 1.
2 K. Kumaş and A. O. Akyüz, Estimation of greenhouse gas emission and global warming potential of livestock sector; Lake District, Türkiye, *Int. J. Environ. Geoinform.*, 2023, **10**(1), 132–138.
3 S. Moazzem, L. Wang, F. Daver and E. Crossin, Environmental impact of discarded apparel landfilling and recycling, *Resour., Conserv. Recycl.*, 2021, **166**, 105338.
4 K. O. Yoro and M. O. Daramola. CO_2 emission sources, greenhouse gases, and the global warming effect, in *Advances in Carbon Capture*, Woodhead Publishing, 2020, pp. 3–28.
5 R. Chaudhary, P. Nain and A. Kumar, Temporal variation of leachate pollution index of Indian landfill sites and associated human health risk, *Environ. Sci. Pollut. Res.*, 2021, **28**, 28391–28406.
6 U. Anand, B. Reddy, V. K. Singh, A. K. Singh, K. K. Kesari, P. Tripathi and J. Simal-Gandara, Potential environmental and human health risks are caused by antibiotic-resistant bacteria (ARB), antibiotic-resistance genes (ARGs) and emerging contaminants (ECs) from municipal solid waste (MSW) landfill, *Antibiotics*, 2021, **10**(4), 374.
7 P. O. Njoku, J. N. Edokpayi and J. O. Odiyo, Health and environmental risks of residents living close to a landfill: a case study of Thohoyandou Landfill, Limpopo Province,

 © 2025 The Author(s). Published by the Royal Society of Chemistry

Open Access Article. Published on 03 January 2025. Downloaded on 12/1/2025 9:35:42 PM. This article is licensed under a Creative Commons Attribution-NonCommercial 3.0 Unported Licence.

South Africa, *Int. J. Environ. Res. Public Health*, 2019, **16**(12), 2125.

8 G. S. Manjunatha, P. Lakshmikanthan, D. Chavan, D. S. Baghel, S. Kumar and R. Kumar, Detection and extinguishment approaches for municipal solid waste landfill fires: a mini review, *Waste Manage. Res.*, 2023, 16–26.

9 J. S. Bihałowicz, W. Rogula-Kozłowska and A. Krasuski, Contribution of landfill fires to air pollution–An assessment methodology, *Waste Manage.*, 2021, **125**, 182–191.

10 L. Lombard, AECOM offers municipalities a complete service for landfill management, *Civ. Eng.*, 2020, **28**(7), 54–55.

11 T. S. Duze, *Assessing the Socio-Economic Impacts of New England Road Landfill Site, KwaZulu-Natal Province*, University of Johannesburg, South Africa, 2019.

12 C. Acker, *A Static Flux Chamber Design for Evaluation of Gas Flux through Composite Cover Systems*, University of Wisconsin-Madison, 2020.

13 E. Gallego, J. F. Perales, F. J. Roca and X. Guardino, Surface emission determination of volatile organic compounds (VOC) from a closed industrial waste landfill using a self-designed static flux chamber, *Sci. Total Environ.*, 2014, **470**, 587–599.

14 F. Atabi, M. A. Ehyaei, and M. H. Ahmadi. Presented in part at Calculation of CH_4 and CO_2 emission rate in Kahrizak landfill site with LandGEM mathematical model, in *The 4th World Sustainability Forum*, 2014.

15 E. Gallego, J. F. Perales, N. Aguasca and R. Domínguez, Determination of emission factors from a landfill through an inverse methodology: experimental determination of ambient air concentrations and use of numerical modelling, *Environ. Pollut.*, 2024, **351**, 124047.

16 C. Stadler, V. S. Fusé, S. Linares, S. A. Guzmán and M. P. Juliarena, Accessible sampling methodologies to quantify the net methane emission from landfill cells, *Atmos. Pollut. Res.*, 2024, **15**(3), 102011.

17 D. D. E. Mandal, S. Biswas and B. Das, Advancements in the recovery and refinement of landfill gas from sanitary landfills, in *Material and Energy Recovery from Solid Waste for a Circular Economy*, 2024, pp. 175–211.

18 A. Khaleghi, E. Bourlon, J. Stuart, R. Martino, J. Vogt, L. Coyle, M. LeVernois, M. Lavoie, G. Perrine, A. Kennedy and M. Boyd, A comparison of methane source localization methods in landfills across Canada using truck-based measurement, Lagrangian stochastic back trajectory modeling, and Landsat thermal images, in *EGU General Assembly Conference Abstracts*, 2023, p. EGU-10442.

19 M. Yilmaz, J. M. Tinjum, C. Acker and B. Marten, Transport mechanisms and emission of landfill gas through various cover soil configurations in an MSW landfill using a static flux chamber technique, *J. Environ. Manage.*, 2021, **280**, 111677.

20 A. F. C. Gámez, J. M. R. Maroto and I. V. Pérez, Quantification of methane emissions in a Mediterranean landfill (Southern Spain). A combination of flux chambers and geostatistical methods, *Waste Manage.*, 2019, **87**, 937–946.

21 M. Gollapalli and S. H. Kota, Methane emissions from a landfill in north-east India: Performance of various landfill gas emission models, *Environ. Pollut.*, 2018, **234**, 174–180.

22 P. O. Njoku, J. N. Edokpayi and J. O. Odiyo, Modeling landfill gas potential and potential energy recovery from Thohoyandou landfill site, South Africa, *J. Air Waste Manage. Associat.*, 2020, **70**(8), 820–833.

23 K. M. Pehme, K. Orupõld, V. Kuusemets, O. Tamm, Y. Jani, T. Tamm and M. Kriipsalu, Field study on the efficiency of a methane degradati on layer composed of fine fraction soil from landfill mining, *Sustainability*, 2020, **12**(15), 6209.

24 G. Allen, P. Hollingsworth, K. Kabbabe, J. R. Pitt, M. I. Mead, S. Illingworth and C. J. Percival, The development and trial of an unmanned aerial system for the measurement of methane flux from landfill and greenhouse gas emission hotspots, *Waste Manage.*, 2019, **87**, 883–892.

25 IPCC, 2006, *IPCC Guidelines for National Greenhouse Inventory*, 2006, accessed 12 November, 2024, **https://view.officeapps.live.com/op/view.aspx?src=https%3A%2F%2Fwww.ipcc-nggip.iges.or.jp%2Fpublic%2F2006gl%2Fpdf%2F5_Volume5%2FIPCC_Waste_Model.xlsandwdOrigin=BROWSELINK**.

26 S. Bhailall, *Landfills Gas Emissions and the Associated Air Quality, Energy and Climate Change Implications in South Africa*, University of Witwatersrand Johannesburg, 2015.

27 C. Chiemchaisri and C. Visvanathan, Greenhouse gas emission potential of the municipal solid waste disposal sites in Thailand, *J. Air Waste Manage. Assoc.*, 2008, **58**(5), 629–635.

28 N. S. Hadi, Estimation of municipal solid waste generation rate (Case study of Hilla city), *J. Kerbala Univ.*, 2014, **12**(1), 72–80.

29 StatSA, *Improving lives Through Data Ecosystem*, accessed 12 April, 2023, **https://www.statssa.gov.za/?page_id=993andid=thulamela-municipality**.

30 A. Nefale, An Evaluation of Strategic Management of Landfill Sites: A Case Study of Thohoyandou Block J. Landfill Site, Vhembe District Municipality, Limpopo Province, Doctoral dissertation, University of Venda, 2016.

31 F. B. De la Cruz, R. B. Green, G. R. Hater, J. P. Chanton, E. D. Thoma, T. A. Harvey and M. A. Barlaz, Comparison of field measurements to methane emissions models at a new landfill, *Environ. Sci. Technol.*, 2016, **50**(17), 9432–9441.

32 J. Zhang, B. Dubey and T. Townsend, Effect of moisture control and air venting on H_2S production and leachate quality in mature CandD debris landfills, *Environ. Sci. Technol.*, 2014, **48**(20), 11777–11786.

33 X. Wang, M. Jia, X. Chen, Y. Xu, X. Lin, C. M. Kao and S. Chen, Greenhouse gas emissions from landfill leachate treatment plants: a comparison of young and aged landfill, *Waste Manage.*, 2014, **34**(7), 1156–1164.

Open Access Article. Published on 03 January 2025. Downloaded on 12/1/2025 9:35:42 PM.
This article is licensed under a Creative Commons Attribution-NonCommercial 3.0 Unported Licence.

34 M. Y. Zainun and K. Simarani, Metagenomics profiling for assessing microbial diversity in both active and closed landfills, *Sci. Total Environ.*, 2018, **616**, 269–278.
35 A. B. Fourie and J. W. F. Morris, Measured gas emissions from four landfills in South Africa and some implications for landfill design and methane recovery in semi-arid climates, *Waste Manage. Res.*, 2004, **22**(6), 440–453.
36 T. D. Stark and E. J. Newman, Design of a landfill final cover system, *Geosynth. Int.*, 2010, **17**(3), 124–131.
37 W. H. Albright, C. H. Benson, G. W. Gee, T. Abichou, E. V. McDonald, S. W. Tyler and S. A. Rock, Field performance of a compacted clay landfill final cover at a humid site, *J. Geotech. Geoenviron. Eng.*, 2006, **132**(11), 1393–1403.
38 X. Wang, M. Jia, X. Lin, Y. Xu, X. Ye, C. M. Kao and S. Chen, A comparison of CH_4, N_2O and CO_2 emissions from three different cover types in a municipal solid waste landfill, *J. Air Waste Manage. Assoc.*, 2017, **67**(4), 507–515.
39 C. W. Ng, R. Chen, J. L. Coo, J. Liu, J. J. Ni, Y. M. Chen and B. W. Lu, A novel vegetated three-layer landfill cover system using recycled construction wastes without geomembrane, *Can. Geotech. J.*, 2019, **56**(12), 1863–1875.
40 L. A. Garcete, J. E. Martinez, D. B. Barrera, R. C. Bonugli-Santos and M. R. Passarini, Biotechnological potential of microorganisms from landfill leachate: Isolation, antibiotic resistance and leachate discoloration, *An. Acad. Bras. Cienc.*, 2022, **94**(3), e20210642.
41 P. L. Herath, D. Jayawardana and N. Bandara, Quantification of methane and carbon dioxide emissions from an active landfill: study the effect of surface conditions on emissions, *Environ. Earth Sci.*, 2023, **82**(2), 64.
42 J. Mønster, P. Kjeldsen and C. Scheutz, Methodologies for measuring fugitive methane emissions from landfills–A review, *Waste Manage.*, 2019, **87**, 835–859.
43 A. A. Araye, M. S. Yusoff, N. A. Awang and T. S. Abd Manan, Evaluation of the methane (CH_4) Generation rate constant (k value) of municipal solid waste (MSW) in Mogadishu City, Somalia, *Sustainability*, 2023, **15**(19), 14531.
44 K. Wangyao, M. Yamada, K. Endo, T. Ishigaki, T. Naruoka T, S. Towprayoon, C. Chiemchaisri and N. Sutthasil, Methane generation rate constant in tropical landfill, *J. Sustainable Energy Environ.*, 2010, **1**(4), 181–184.
45 T. Malmir, D. Lagos and U. Eicker, Optimization of landfill gas generation based on a modified first-order decay model: a case study in Quebec province, *Environ. Syst. Res.*, 2023, 6, DOI: **10.21203/rs.3.rs-2534752/v1**.
46 W. Sun, X. Wang, J. F. DeCarolis and M. A. Barlaz, Evaluation of optimal model parameters for prediction of methane generation from selected US landfills, *Waste Manage.*, 2019, **91**, 120–127.
47 A. Sil, S. Kumar and J. W. Wong, Development of correction factors for landfill gas emission model suiting Indian condition to predict methane emission from landfills, *Bioresour. Technol.*, 2014, **168**, 97–99.
48 L. Capellia, S. Sironia, R. Del Rossoa and E. Magnanob, Evaluation of landfill surface emissions, *Ital. Assoc. Chem. Eng.*, 2014, **40**, 187–192.
49 G. Di Bella, D. Di Trapani and G. Viviani, Evaluation of methane emissions from Palermo municipal landfill: comparison between field measurements and models, *Waste Manage.*, 2011, **31**(8), 1820–1826.

 © 2025 The Author(s). Published by the Royal Society of Chemistry