JAAS

ROYAL SOCIETY OF CHEMISTRY

TECHNICAL NOTE

View Article Online
View Journal | View Issue

Open Access Article. Published on 06 June 2025. Downloaded on 11/11/2025 6:44:59 AM.
This article is licensed under a Creative Commons Attribution 3.0 Unported Licence.

Check for updates

Cite this: *J. Anal. At. Spectrom.*, 2025, **40**, 1666

A workflow-optimized protocol for accelerated sample preparation and automated Sr separation from natural waters for $^{87}Sr/^{86}Sr$ determination†

Grace N. Manestar, *[ac] Hilary M. K. Lewis,[bc] Alex McCoy-West,[c] Nishen Naidoo,[d] Stefan Makart,[e] Ondrea Thompson[e] and Brandon Mahan[ac]

Radiogenic strontium ($^{87}Sr/^{86}Sr$) is a powerful tool for characterizing and differentiating water reservoirs (among many other applications). The development and improvement of high-precision analytical platforms (namely MC-ICP-MS) has enhanced throughput for isotope ratio determination. However, analyte purification—needed to remove isobaric interferences—continues to occur largely *via* conventional manual gravity-driven ion exchange chromatography (hereafter: manual IEC), which generally cannot match instrument throughput. This has created a persistent throughput gap that encumbers use and proliferation, emphasizing the need for rapid separation of Sr, and of comprehensive, end-to-end high throughput workflows and analytical approaches that are fit-for-purpose. Here we have developed a workflow-optimized protocol for sample preparation and separation of Sr from natural water samples using both workflow-optimized manual IEC and automated high pressure ion chromatography (HPIC), for subsequent analysis *via* MC-ICP-MS. These methods have been designed to seamlessly integrate with common international practice for water sample collection. The automated HPIC technique accommodates introduction of water samples filtered with standard 0.45 μm membranes and acidified with ultra-high purity nitric acid (HNO_3, to pH of 1–2, approximated as 0.09 mol per L HNO_3). Filtered and acidified samples are directly introduced into the HPIC system where Sr is separated from other cations (namely Ca) and collected as an isolate in a specific volume of ultrapure water. Strontium isolates, with no further preparation (*e.g.* dry-down and reflux), are then directly acidified to 0.5 mol per L HNO_3 and analyzed by MC-ICP-MS. This technique can process 40–50 samples in a 24 hour period with mitigated potential for human error, matching current MC-ICP-MS analytical capacity, and achieving analytical precision sufficient to distinguish the variability observed in natural samples across many applications.

Received 6th March 2025
Accepted 29th April 2025

DOI: 10.1039/d5ja00086f

rsc.li/jaas

1. Introduction

The development and proliferation of multi-collector inductively-coupled-plasma mass spectrometry, MC-ICP-MS, has made it possible to analyze *e.g.* 40–50 individual samples per day (24 hours) for a given isotope ratio system.[1–3] While this has provided a great leap forward with respect to analytical throughput capabilities, for example relative to thermal ionization mass spectrometry (TIMS), complementary advancements in sample preparation and analyte separation chemistry have yet to catch up, with most research still relying on conventional manual gravity-driven or vacuum-assisted ("drip") ion exchange chromatography (IEC), hereafter referred to simply as manual IEC.[4–8] Manual IEC is consumables intensive, as well as being time-consuming and demanding with respect to skillset of laboratory staff and moreover is done inside highly specialized geochemistry clean laboratories (typically ISO-7 specification or better), rendering these practices largely impractical in the face of growing popularity and need of rapid isotopic characterization of materials at scale. While workflow optimization and/or automation of protocols has been adopted with great success in more conventional areas of isotopic analysis, namely those focused on light isotope systems (H, C, N, O and S),[9,10] this has thus far not translated to radiogenic or non-traditional stable isotope systems like $^{87}Sr/^{86}Sr$.

Applications of $^{87}Sr/^{86}Sr$ are myriad because this isotopic ratio is not significantly perturbed (fractionated) by equilibrium or kinetic processes—i.e. it is largely "isotopically conservative"—and is therefore a robust tracer of many materials back to

[a]*Melbourne Analytical Geochemistry, School of Geography, Earth and Atmospheric Sciences, University of Melbourne, Melbourne, Australia. E-mail: grace.manestar@student.unimelb.edu.au*

[b]*Research School of Earth Science, College of Science, Australian National University, Canberra, Australian Capital Territory, Australia*

[c]*IsoTropics Geochemistry Lab, Earth and Environmental Science, James Cook University, Townsville, Queensland 4811, Australia*

[d]*Thermo Fisher Scientific, Level 1/4 Talavera Rd, North Ryde, NSW 2113, Australia*

[e]*Thermo Fisher Scientific, 5 Caribbean Dr, Scoresby, VIC 3179, Australia*

† Electronic supplementary information (ESI) available. See DOI: https://doi.org/10.1039/d5ja00086f

This journal is © The Royal Society of Chemistry 2025

Open Access Article. Published on 06 June 2025. Downloaded on 11/11/2025 6:44:59 AM. This article is licensed under a Creative Commons Attribution 3.0 Unported Licence.

their geological/geographical context.[11–14] In brief, older and/or more Rb-rich geologic units will have higher $^{87}Sr/^{86}Sr$ due to the radioactive decay of ^{87}Rb to ^{87}Sr over time; this means that many geologic, and therefore geographic locations, have unique $^{87}Sr/^{86}Sr$ values relative to adjacent areas, allowing for discrimination between reservoirs. Importantly, $^{87}Sr/^{86}Sr$ is not significantly affected by secondary processes (weathering, biological uptake, *etc.*), therefore it is a powerful means to trace materials—solid and aqueous, inorganic and organic—back to their original source; in this respect, it is called a "conservative" isotope ratio. Lastly, due to efficient mixing on geological timescales, the $^{87}Sr/^{86}Sr$ of the modern global ocean (or indeed any point in time) is a fixed value (currently 0.709165 ± 0.000005 2σ), marking a robust point of difference to other natural waters.[15]

Water is the most critical resource on the planet, especially in the face of changing climate. As such, it is paramount to have the means and capacity to characterize water reservoirs, their interaction with each other and with their host environment, and to do this at scale. This is true across many applications, *e.g.* environmental source tracing and impact assessment, and is of particular importance with respect to groundwater-dependent environments, where it is critical not only in itself but in its impact on livestock, agriculture and the like, thereby also impacting food security.[16,17] $^{87}Sr/^{86}Sr$ ratios are intensely useful for differentiating between aquifers and other water sources, and because the above-mentioned observation regarding a universal $^{87}Sr/^{86}Sr$ for modern seawater, this tool is immensely useful in applications such as constraining seawater ingress to freshwater systems, and differentiation freshwater reservoirs (*e.g.* aquifers) hosted in differing lithologies.[18–22] Further, $^{87}Sr/^{86}Sr$ has shown utility in tracking brine migration related to carbon dioxide injection for carbon storage,[23,24] as well as in being a reliable proxy for bioavailable Sr[12,20] and therefore also viable for developing large-scale $^{87}Sr/^{86}Sr$ "isoscapes" for modern and paleo-forensics (the former notably including food security applications).[8,25–29] In all, this highlights $^{87}Sr/^{86}Sr$ as incredibly useful across a wide variety of applications, and strongly aligned to many of the UN's Sustainability Development Goals (*e.g.* SDGs 2, 3, 6, 9, 11–15). This marks $^{87}Sr/^{86}Sr$ of great utility in the march towards a sustainable future, while underscoring a need for pan-applicable, highly adaptable/adoptable and high-throughput protocols for its determination by mass spectrometry.

Characterization of $^{87}Sr/^{86}Sr$ in natural water samples is typically done *via* conventional time- and resource-intensive methodologies thus hindering widespread deployment of this tool, making large-scale projects very workload-intensive and therefore scarce and/or susceptible to failed follow-through (long-term abandonment). Several studies[30–33] in the past have addressed this throughput gap, with most focusing on accelerating and/or automating the Sr separation aspect of the overall workflow. Of note, to the best of our knowledge all such studies have dried down collected water samples and refluxed in dilute acid prior to Sr separation chemistry.[3,23,34–36] One exception is Meynadier *et al.* (2006) who directly injected filtered and acidified samples, however their automated separation protocol utilized an isocratic elution scheme (same eluent concentration throughout), and subsequent analyses *via* TIMS.

In addition, other studies have conducted direct measurements of $^{87}Sr/^{86}Sr$ ratio in bulk samples, *i.e.* with no Sr separation by direct analysis using MC-ICP-MS[37,38] and TIMS (*e.g.* Li *et al.*, 2015).[39] However, these methods (Ehrlich *et al.*, 2001, Yang *et al.*, 2011, Li *et al.*, 2015) without Sr separation are not suitable for water sample with high Ca/Sr (>700), and further, Ehrlich *et al.*, (2001) and Yang *et al.*, (2011) note that the samples are introduced through the use of a nebulizer, which could have potential long-term issues and/or during long analytical sequences, due to matrix build-up on introduction system parts over time. Furthermore, it is generally not advisable to introduce bulk water samples into MC-ICP-MS, as the presence of major cations (*e.g.* Na, Ca, Mg, K), major anions (*e.g.* Cl, F), and residual organics (and S), in appreciable abundances in natural waters all pose significant risks of contaminating or otherwise degrading the instrument's introduction system and peripherals (autosampler systems, tubing, torch assembly, cones, *etc.*), and cause accelerated degradation of the detector arrays.[40]

Karasinski *et al.* (2016) introduces an innovative on-line isotopic determination of $^{87}Sr/^{86}Sr$ by coupling ion chromatography (IC, Thermo Scientific Dionex ICS-5000^{+}) and MC-IC-PMS (Nu Plasma II), which eliminates matrix effects and achieves precision comparable to traditional offline approaches. However, the paper discusses that the required introduction system configuration leads to significantly increased analysis time and significant peak broadening (entire analysis time is about 14 min; as opposed to 5–8 minutes herein), potentially counter to a key goal of increasing overall throughput.

In summary, $^{87}Sr/^{86}Sr$ is a powerful geo-analytical tool across many applications and is of acute utility in the characterization of water reservoirs and their co-interaction. While current analytical platforms (*e.g.* MC-ICP-MS) allow for the generation of large datasets *via* relatively high throughput, laboratory methods have lagged and are still largely conducted by manual IEC. Prior research that has explored accelerated and/or automated protocols for Sr (and other elements) separation[31,32] have done so typically with specific applications and/or academic pursuits in mind, leading to non-comprehensive and non-generalized streamlining of methodological workflow(s).

Here, we have drawn on the literature to incorporate and innovate upon these advances to define a comprehensive protocol and workflow for Sr separation from natural water samples (ranging from fresh to seawater) and improved upon methodologies for both conventional and automated Sr separation chemistry. These methods have been validated by analyses of international Certified Reference Materials (CRMs) as well as a cohort of natural groundwater (GW) samples, all with comparative $^{87}Sr/^{86}Sr$ analytics determined *via* manual IEC. Moreover, the techniques developed herein have been developed within the context of international water collection protocols to be able to widely accept samples to the automated workflow by common international water sampling practices,[41] thereby ensuring the viability of seamless integration into industry, government and commercial/consultancy protocols

Open Access Article. Published on 06 June 2025. Downloaded on 11/11/2025 6:44:59 AM.
This article is licensed under a Creative Commons Attribution 3.0 Unported Licence.

and guidelines for water sampling, "future-proofing" these technique for the expanded utilization of $^{87}Sr/^{86}Sr$ on the horizon.

2. Methodology

2.1 Standards and samples

Standard solutions were prepared from the NIST SRM 987 $SrCO_3$ (Institute of Standards and Technology) and High Purity Standards™ (HPS) 1000 μg per mL Sr solution (lot #1305924; hereafter HPS-Sr). As high-matrix samples are those most difficult for efficient Sr separation, the CERC CRM NASS-7, well characterized elsewhere for $^{87}Sr/^{86}Sr$, was used for methodological validation. Further CRMs such as CASS-6 were included for further validation and to provide $^{87}Sr/^{86}Sr$ characterization for this CRM, of great value to the scientific community. To rigorously test this protocol end-to-end, an array of groundwater samples ($n = 24$) with a range of $^{87}Sr/^{86}Sr$ values (determined by conventional separation chemistry) were included.

Lastly, an in-house 7-cation standard was developed from single element standards from High Purity Standards™ 1000 μg mL^{-1} (Li, Na, K, Mg, Rb, Ca, and Sr) for use in refining the automated chromatography procedure for optimal Sr separation.

2.2 Sample preparation

All natural groundwater samples were filtered using 0.45 μm PTFE filters (MicroScience™) in the field, refrigerated during all storage and transport, and acidified to pH 1–2 using ultra-pure double-distilled nitric acid (HNO_3), in line with international conventions,[41] directly upon receipt into the IsoTropics Geochemistry Laboratory at James Cook University (JCU).

Ultrapure Milli-Q® IQ Element system water, HNO_3 and ultra-pure double-distilled hydrochloric acid (HCl) were the only non-commercial reagents used in this work. All Polypropylene (PP) labware including vials, beakers, and pipette tips, were thrice rinsed with Milli-Q water before immersion in covered vessels containing 2 mol per L (M) HNO_3 and leached for 2–4 weeks. Ultra-pure perfluoroalkoxy (PFA) vessels (Savillex®) were cleaned carefully with PP brushes with Decon-90™ lab detergent using heated Milli-Q, then batch cleaned in 6 M HNO_3 for 24 hours on a hotplate at 120 °C. Batch cleaned PFA vessels were then individually filled with 16 M HNO_3 (1/4 full) and heated at 120 °C for 24 hours, followed by 6 M HCl heating at 120 °C for 48–72 hours. All PFA vessels were rinsed with Milli-Q three times in between cleaning steps. Finally, prior to use, all labware (PP and PFA) undergo thrice rinsing with Milli-Q water and subsequent drying under positive pressure HEPA-filtered air (Thermo HeraGuard® Biobench™) inside an ISO-7 clean laboratory.

2.3 Major and trace element analyses of natural groundwater samples

Major and trace elements of natural groundwater samples were analyzed prior to automated and manual IEC for the determination of major matrix elements and Sr/Ca ratios, at the Advanced Analytical Centre (AAC) at JCU, Townsville. Calcium concentrations for all samples were analyzed using the Agilent™ 5900 ICP-OES equipped with an Agilent™ SPS4 autosampler; a three-point calibration was utilized for all elements. Strontium concentrations for all elements were analyzed using a Thermo Fisher® iCAP™ TQ-ICP-MS equipped with a Cetac™ ASX-560 autosampler; a four-point calibration was used for determination of Sr concentration. Calcium and Sr concentrations in the international water CRMs CASS-6 and NASS-7 were analyzed by an Agilent™ 7700× Q-ICP-MS at Melbourne Analytical Geochemistry (MAG; School of Geography, Earth and Atmospheric Sciences; The University of Melbourne) using BCR-2 as calibration standard.

2.4 Manual IEC Sr separation

Manual IEC was conducted in the IsoTropics Geochemistry Laboratory (JCU, Townsville). The methodology utilized herein is based on the widely implemented protocol for Sr separation using Eichrom™ Sr-Specific resin (Sr-spec, 50–100 μL).[13,14,42–44] However, novel to the current work (to the best of our knowledge), as opposed to drying down prescribed volumes of water samples (to achieve a specific mass of Sr), here sample dry-down was completely avoided. Instead, prescribed volumes of water samples (based on Sr concentrations determined by Q-ICP-MS) were acidified to achieve a final HNO_3 molarity of ~3 M (assuming pH 1–2 for acidified CRMs and natural water samples). It is noted that where elemental concentrations are not a project requirement, 0.1–1.0 mL of natural water is typically adequate to yield sufficient Sr for MC-ICP-MS analyses.

Chromatographic columns were made from standard 1 mL pipette tips (Eppendorf e.p. Tips® or Thermo Scientific™ FinnTip™), wherein approximately 0.5 cm of the tip was cut off diagonally (to promote flow and reduce "dead volume" below frit), and a pre-fabricated 4 mm circular polyethylene (PE) frit (30 μm pore-size, 3 mm thickness; BioComma™) was fitted into the tapered end. After assembly, columns are sonicated to remove debris and rinsed thrice in Milli-Q® water, then placed in 2 M HNO_3 for leaching and storage until use. Sr-spec resin (50–100 μm particle size) was batch cleaned thoroughly before use, by loading approximately 10 mL resin (enough for >100 columns) as a water slurry into 20 mL Bio-Rad Poly-Prep® column with a 225 mL Econo-Pac reservoir attached. Full column volumes of 0.05 M HNO_3, 6 M HCl, 3 M HNO_3 and Milli-Q water were passed in succession (at least thrice) to batch clean the resin. This step removes labile organic compounds and minimizes Sr blank contribution from the resin. The cleaned resin is stored as a slurry in dilute HNO_3 (*ca.* 0.01 M) until use. Leached and rinsed (3×) pipette tip columns are then filled with approximately 75–100 μL of Sr-Spec™ resin. The resin is pre-cleaned in the columns by passing of two column volumes (approx. 2 mL) each of Milli-Q water, 3 M HNO_3, Milli-Q water, then conditioned with 1 mL of 3 M HNO_3. Strontium separation is achieved by loading the column with samples of pre-defined volumes (to achieve ~600 ng Sr for groundwater samples and 1000 ng Sr for water standards), after which three column volumes of 3 M HNO_3 is passed to remove matrix elements,

Open Access Article. Published on 06 June 2025. Downloaded on 11/11/2025 6:44:59 AM.
This article is licensed under a Creative Commons Attribution 3.0 Unported Licence.

notably Rb and Ca, which are crucial elements to be removed prior to analysis. Following matrix elution, clean PFA vessels (7 mL, Savillex®) are placed under the columns and Sr is eluted from the column in two column volumes of Milli-Q water. The Sr fraction is then dried and refluxed in 1.5 mL of 0.5 mol per L HNO_3 for subsequent analysis by MC-ICP-MS.

2.5 Automated Sr separation

Automated Sr separation chemistry was conducted using a Thermo Scientific™ Dionex™ ICS-6000 (Fig. 1 schematically represents the configuration used herein). The system consists of an auto-sampler (Thermo Scientific™ Dionex™ AS-HV), two high-pressure piston pumps (analytical pump for the chromatography system and auxiliary pump for the suppressor), a Reagent Free Ion Chromatography system with Eluent Generator (RFIC-EG) and Dionex™ CR-CTC 600, a detector and chromatography unit, and a fraction collector (Thermo Scientific™ VF-F11-A-01). The RFIC-EG generates the high purity acid eluents (methanesulfonic acid, MSA) for the whole system using Milli-Q water as the carrier, while the EG automatically formulates the MSA concentration based on user-defined settings (here, a Dionex™ EGC 500 MSA eluent generator cartridge was utilized).

The detector and chromatography module are split into two units, the detector upper unit houses the Dionex™ DRS 600 (2 mm) dynamically regenerated suppressor and the conductivity detector. The auxiliary pump (AXP pump) delivers Milli-Q water to the suppressor to help hydrate and assist the removal of MSA from the water sample, *i.e.* after passage through the eluent suppressor, only single element isolates in pure water pass downstream to the conductivity detector, subsequently collected by the fraction collection. The lower chromatography unit houses the two columns (guard column, analytical column) and a 6-port valve with the 100 μL sample loop; the sample loop is where the eluent and the sample are mixed before injected into the columns. In the configuration selected herein, a Dionex IonPac CG16 guard column (3 × 50 mm) is placed before the Dionex IonPac CS16 separation column (3 × 250 mm); the guard column prevents sample contaminants from eluting into the main separation column, and the internal volume of the separation column is selected based on injection volume (here, the maximum 100 μL loop volume was utilized). While not within the scope of the present work, prior research has shown that, depending on the specific application or sample matrices (high matrix may increase degradation), these cation columns can last for several hundreds to a few thousand runs.[31] Additionally, the DC module is individually temperature controlled by separate heating units to maintain peak stability. Overall, individual modules are connected by inert polyether ether ketone (PEEK) tubing and the whole system is controlled by the Chromeleon™ CDS version 7.2 software.

Briefly, each water sample is introduced as a 100 μL injection into the Dionex ICS-6000. The sample is acidified with MSA and then moves through the columns where the cations are separated, then into the suppressor where H^+ ions from the sample matrix are electrolytically removed (this step removes MSA for conductivity detection), delivering MSA-free sample cation solutions to the conductivity detector according to their time-dependent retention on the chromatographic column. Individual cations (*i.e.* Ca or Sr) will pass through the conductivity detector one at a time (due to different charge and element radii

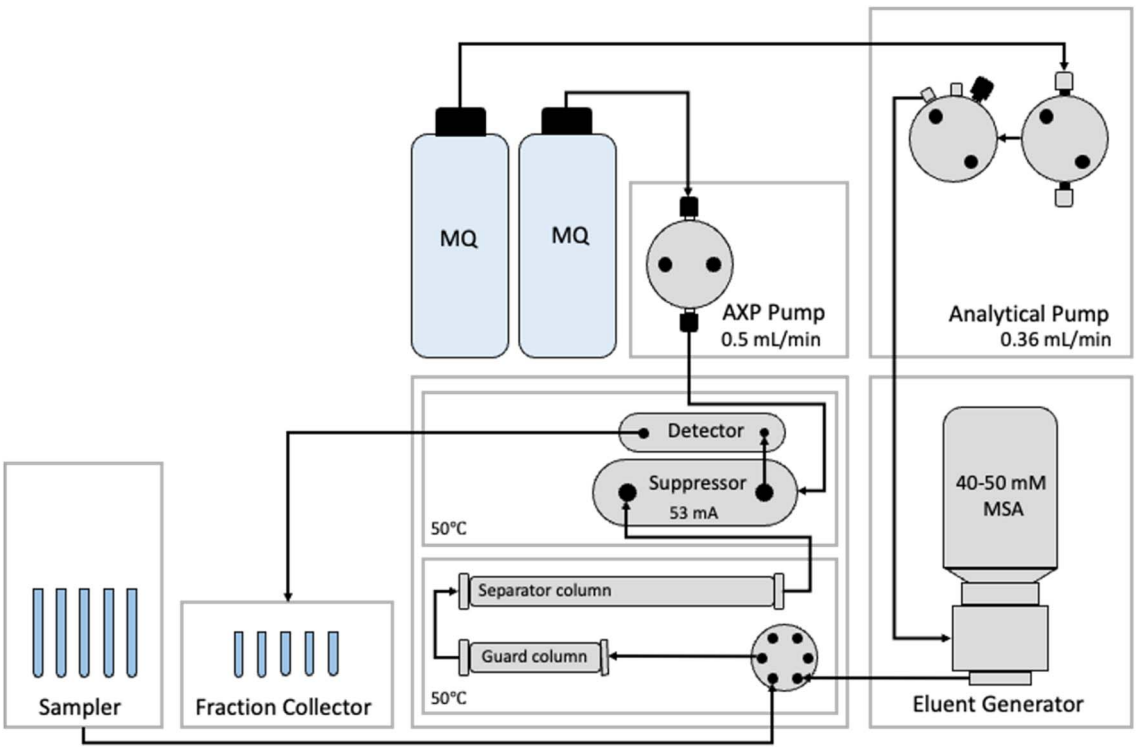

Fig. 1 Schematic illustration of the Dionex ICS-6000 automated HPIC system. Arrows represent the flow path.

Open Access Article. Published on 06 June 2025. Downloaded on 11/11/2025 6:44:59 AM. This article is licensed under a Creative Commons Attribution 3.0 Unported Licence.

volume, and therefore retention time on the analytical column), wherein the detector sends a signal to the Chromeleon™ software, generating a live read-out of conductivity; this provides real-time elution profile monitoring. With the addition of the fraction collector, once the time window is defined for the selected ion—in this case Sr—the system can be programmed for optimal timing of isolate collection; this is essentially a fixed volume collection, as flow rate is a set constant of the methodology.

Because Sr isolates from fraction collection are devoid of MSA, and of a well-constrained volume (defined by time-window of collection and constant flow rate), in this case producing 0.36–0.54 mL of purified Sr in water. Samples can be directly acidified to 0.5 mol per L HNO_3 using high-purity 16 M HNO_3 with no dry-down/reflux and are thereafter ready for isotopic analysis by MC-ICP-MS following vortex agitation after approximately five minutes (allowing for equilibration of dilute HNO_3 solution).

2.6 Mass spectrometry (MC-ICP-MS)

The analytical approach taken herein was chosen for simplicity and comparability to common practice in the literature, and with throughput as a major criterion (not lowest possible analytical uncertainty). In brief, Sr isotope compositions ($^{87}Sr/^{86}Sr$) were measured with a Thermo Fisher® Neptune™ MC-ICP-MS at the Advanced Analytical Centre (AAC; JCU). The interface system consisted of a standard Ni sample cone and H-skimmer cone, and the introduction system consisted of a double-pass dual cyclonic spray chamber (Glass Expansion™; Melbourne, Australia) coupled to an Elemental Scientific® PFA-ST nebulizer with 50 μL min^{-1} probe-capillary assembly. Each analysis was preceded by a 90 second wash out and 40 cycles of 4.194 second integrations with static Faraday collectors; with this method, each $^{87}Sr/^{86}Sr$ analysis takes approximately 5–8 minutes. All results were mass-bias corrected using NIST SRM 987 (analyzed throughout the analytical session) using $^{87}Sr/^{86}Sr = 0.710248$. All analytical uncertainties of groundwater samples are reported in 2SE (individual analysis) while water standards and CRMs are reported in 2SD (multiple populations of data acquired in multiple sessions).

To monitor long-term instrument stability, the High Purity Standard (HPS) Sr was analyzed in every analytical session, yielding an average $^{87}Sr/^{86}Sr$ of 0.707618 ± 0.000012 (2SD, $n = 9$). 7 cation standards reported an average of 0.708736 ± 0.000002 (2SD, $n = 2$).

SRM987 through the automated system, yielding 0.710244 ± 0.000033 (2SD, $n = 6$), in excellent agreement with previous data *via* multi-collector using similar automated system. For reference, Meynadier *et al.* (2006) reported 0.710277 ± 0.000028 (2SD) and Karasinski *et al.* (2016) reported 0.71025 ± 0.00003 (2SD).

3. Results & discussion

3.1 Major cations, Sr, Ca/Sr and $^{87}Sr/^{86}Sr$

Table 1 summarizes major cation data and Table 2 reports the isotopic data from the current work; where available, literature $^{87}Sr/^{86}Sr$ of CRMs are reported for comparison in Table 3.[32,42,45–49]

The Ca/Sr and Na (salinity) contents of samples within this study vary considerably, highlighting the spectrum of water matrices investigated herein. Strontium concentrations of groundwater samples ranged from 407 to 3481 ppb and show no relationship with Sr isotope compositions. Groundwater $^{87}Sr/^{86}Sr$ ratio from the manual IEC range from 0.709534 to 0.716068 while automated HPIC range from 0.709454 to 0.715905.

The analytical uncertainties reported in this study for samples processed through HPIC are, on average, only ~10 ppm (*i.e.* 0.000010 for $^{87}Sr/^{86}Sr$) higher than those obtained using conventional manual IEC, despite omitting several steps such as sample dry-down and reflux, which offer mitigation to analytical artefacts caused *e.g.* by residual organics from the sample or resin. This demonstrates the efficacy of the automated HPIC protocol in maintaining reproducibility while significantly streamlining sample preparation and Sr separation chemistry. Given that external reproducibility for natural samples typically exceeds 20 ppm[13,23,37,52,53] and that Sr isotope values for applications such as aquifer differentiation and freshwater-seawater mixing commonly vary at the 3rd or 4th decimal place (0.00× to 0.000×, *i.e.* hundreds to thousands of ppm), the uncertainties observed herein are well within acceptable limits for the intended applications. While precision remains inherently constrained by sample limitations, including low analyte Sr concentrations in natural waters (a consequence of automated system injection only 100 microliters of sample per injection), the correlation between measurement offsets and ^{86}Sr signal intensity using Pearson's correlation analysis ($R^2 = 0.5844$) (excluding GW3, GW9, and GW10, analyses with exceptional poor reproducibility due to low analyte signal) suggests that low Sr intensities during measurement account for 58.4% of the difference in results obtained using manual IEC *versus* automated HPIC protocols. These findings reinforce that the automated HPIC method is a viable alternative to manual IEC for Sr separation for high throughput scalable applications, where rapid sample processing and differentiation are prioritized over lowest possible analytical uncertainties.

Herein, ^{85}Rb voltages (as a proxy for ^{87}Rb) in MC-ICP-MS analyte solutions were monitored for both manual IEC and HPIC methodologies, as ^{87}Rb is a direct analytical interferent on ^{87}Sr. Average ^{85}Rb voltages for the HPIC method were on average slightly lower than that for manual IEC (0.197 mV and 0.235 mV, respectively), indicating excellent separation of Rb and Sr by HPIC; however, it is noted that ^{85}Rb voltages of analyte solutions are cumulative and incorporate Rb not only from separation chemistry, but from subsequent preparation and dilution prior to isotopic analysis. In our HPIC procedure, Rb elutes approximately three minutes before Sr, and the fraction collector is only activated during Sr collection, minimizing potential for Rb carryover into Sr isolates. The lower Sr analyte concentrations with HPIC during isotopic analysis (*e.g.* ^{87}Sr on average 60% that by manual IEC) are due to the use 100 μL sample loop (largest possible). This artificially increases the Rb/

Open Access Article. Published on 06 June 2025. Downloaded on 11/11/2025 6:44:59 AM. This article is licensed under a Creative Commons Attribution 3.0 Unported Licence.

Table 1 Major cation data for groundwater and water standard[b]

	ICP-OES								TQ-ICPMS		
Sample	Ca	SD	K	SD	Mg	SD	Na	SD	Sr	SD	Ca/Sr[a]
GW1	100	0.1	11.4	0.1	82.7	0.1	649	0.9	1230	33	81
GW2	123	0.1	2.8	0.1	122.4	0.2	407	0.2	1179	20	104
GW3	63	0.2	6.3	0.1	56.6	0.2	222	0.4	508	18	123
GW5	119	0.3	1.0	0.1	64.1	0.2	456	1.3	1100	15	108
GW6	101	0.4	4.2	0.1	65.4	0.3	375	1.6	735	9	137
GW7	282	0.5	17.7	0.2	272.3	0.6	1384	2.2	3459	97	82
GW8	282	0.9	17.5	0.2	273.4	1.0	1385	5.8	3481	73	81
GW9	57	0.1	2.5	0.1	38.9	0.1	295	0.3	499	4	115
GW10	57	0.1	2.5	0.1	38.5	0.1	293	0.3	492	12	115
GW11	57	0.1	4.2	0.1	57.2	0.2	192	0.3	407	4	139
GW12	56	0.0	4.0	0.2	56.6	0.1	189	0.2	418	6	134
GW13	50	0.1	5.1	0.1	62.9	0.2	342	0.6	499	5	100
GW14	49	0.5	5.1	0.0	62.5	0.4	340	1.6	499	4	99
GW15	49	0.3	5.1	0.3	62.4	0.3	339	1.4	505	6	97
GW16	47	0.2	6.1	0.1	38.9	0.1	154	0.3	702	9	67
GW17	119	0.3	1.0	0.1	64.9	0.0	449	0.4	1669	40	71
GW19	82	0.2	1.1	0.1	69.0	0.2	183	0.3	712	9	116
GW20	119	0.2	5.8	0.1	104.6	0.3	736	2.8	1746	51	68
GW21	86	0.1	5.2	0.1	57.4	0.1	326	0.2	905	11	95
GW22	71	0.2	2.8	0.2	63.0	0.2	179	0.5	967	11	74
GW23	71	0.1	2.9	0.1	62.8	0.0	179	0.2	969	14	73
GW24	69	0.1	2.6	0.0	60.4	0.1	172	0.2	952	28	72
	Q-ICP-MS										
CASS-6	373	0.89							6.8	0.46	55
NASS-7	386	2.07							7.0	0.86	56

[a] Ca/Sr ratio reported as a fractional percentage of the ppm values. [b] Uncertainties for elemental concentrations are reported as standard deviation (SD) and all data reported in ppm.

Sr of MC-ICP-MS analyte solutions (relative to manual IEC). In the current work, this had no statistically significant effect on $^{87}Sr/^{86}Sr$ ($R^2 = 0.23$ for $^{87}Sr/^{86}Sr$ difference in manual IEC or HPIC, *vs.* analyte solution Rb/Sr as $^{85}Rb/^{86}Sr$). It is noted that while these factors did not affect $^{87}Sr/^{86}Sr$ measurements herein, active monitoring of analyte Rb/Sr is recommended and important in all $^{87}Sr/^{86}Sr$ analyses to ensure no systematic analytical bias is introduced, especially where MC-ICP-MS analyses are conducted at low analyte solution Sr concentrations.

3.2 Expediting water $^{87}Sr/^{86}Sr$ analyses *via* manual IEC

The workflow-optimized manual IEC protocol developed herein for water samples robustly reproduces literature values (Table 2) for matrices from pure solutions all the way to "matrix-heavy" seawater. This alone is unremarkable given this technique is largely an extension of existing widely utilized methods. The significant advantage of optimization presented herein is twofold. Firstly, to the best of our knowledge, the current work is novel in entirely circumventing sample dry-down and refluxing before manual IEC. Sample dry-down is generally done at relatively low temperature (80–100 °C) overnight on a hotplate, with reflux in dilute HNO_3 for Sr separation typically taking an additional several hours or more (for re-dissolution, equilibration, cooling). Moreover, this introduces additional sample manipulation and contact with the ambient environment, as well as further use of reagents (mostly Milli-Q water), potentially increasing likelihood of exogenous inputs (contamination). Here, approximately half to a whole day of the overall protocol is entirely excised, resulting in a vast reduction in sample processing time. Secondly, the majority of water collection protocols internationally specify filtration (0.45 μm membranes) and acidification to pH 1–2 with HNO_3.[54] The workflow developed herein interlocks with these protocols seamlessly, as samples incumbent to the lab can simply be acidified to a HNO_3 molarity of approximately 3 M (literature indicates that anywhere from 1 M to 8 M HNO_3 is acceptable with Sr-Spec™ resin). This not only allows seamless integration into existing water collection protocols, but it also significantly reduces sample manipulation and significant potential for contamination in these initial sample preparation steps. Analytical procedural blanks for manual IEC herein are typically <0.1 ng Sr, negligible relative to the amount of Sr processed (*i.e.* less than 0.02% of target 600 ng). All manual IEC Sr separation was conducted inside a geochemistry clean laboratory (ISO-7 specification or better).

In summary, the manual IEC protocol developed herein reduces sample processing times by up to an entire day and makes it readily viable to process *e.g.* up to 30 water samples in less than half a day in the lab, with minimal use of consumables and reagents, laying open the possibility of both sample preparation/processing and isotopic analysis within the same day. Furthermore, while vacuum-assisted IEC was outside the

Open Access Article. Published on 06 June 2025. Downloaded on 11/11/2025 6:44:59 AM.
This article is licensed under a Creative Commons Attribution 3.0 Unported Licence.

Table 2 Comparison of $^{87}Sr/^{86}Sr$ values obtained from manual IEC and automated HPIC separation method[a]

	IEC						HPIC						Difference	Relative
Sample	^{85}Rb(v)	^{86}Sr(v)	$^{84}Sr/^{86}Sr$	2SE	$^{87}Sr/^{86}Sr$	2SE	^{85}Rb(v)	^{86}Sr(v)	$^{84}Sr/^{86}Sr$	2SE	$^{87}Sr/^{86}Sr$	2SE	($\times 10^6$)	Offset (%)
GW1	2.36×10^{-4}	5.35×10^{-1}	0.056346	47	0.716068	26	1.78×10^{-4}	8.29×10^{-1}	0.05635	37	0.715905	21	164	−2.28%
GW2	9.49×10^{-5}	7.93×10^{-1}	0.055554	32	0.709534	17	7.56×10^{-5}	1.45×10^{0}	0.05643	29	0.709454	22	80	−1.13%
GW3	1.97×10^{-4}	1.47×10^{0}	0.054902	18	0.711298	17	5.23×10^{-4}	7.94×10^{-1}	0.05639	56	0.711309	41	−12	0.17%
GW5	3.17×10^{-4}	7.58×10^{-1}	0.055641	36	0.709942	20	7.16×10^{-5}	1.05×10^{0}	0.05638	26	0.709865	18	77	−1.08%
GW6	1.36×10^{-4}	1.91×10^{0}	0.056420	15	0.713436	16	1.66×10^{-4}	6.93×10^{-1}	0.05633	41	0.713558	20	−123	1.72%
GW7	2.40×10^{-4}	9.50×10^{-1}	0.055328	27	0.715823	12	2.31×10^{-4}	2.60×10^{0}	0.05645	12	0.715743	9	80	−1.12%
GW8	1.75×10^{-4}	7.57×10^{-1}	0.055653	27	0.715869	22	2.56×10^{-4}	3.15×10^{0}	0.05646	8	0.715735	10	134	−1.87%
GW9	1.10×10^{-4}	6.36×10^{-1}	0.055838	45	0.713999	22	8.36×10^{-5}	3.24×10^{-1}	0.05619	68	0.714040	37	−41	0.57%
GW10	1.31×10^{-4}	6.57×10^{-1}	0.055815	37	0.713982	20	6.39×10^{-5}	4.41×10^{-1}	0.05617	72	0.713999	32	−17	0.23%
GW11	4.70×10^{-4}	6.58×10^{-1}	0.055109	29	0.710439	19	5.24×10^{-5}	2.89×10^{-1}	0.05607	100	0.710622	40	−183	2.58%
GW12	1.13×10^{-3}	7.24×10^{-1}	0.055006	32	0.710465	23	2.36×10^{-5}	3.09×10^{-1}	0.05613	86	0.710583	37	−119	1.67%
GW13	1.49×10^{-4}	1.76×10^{0}	0.055299	19	0.713417	13	1.90×10^{-4}	3.45×10^{-1}	0.05622	86	0.713632	39	−215	3.01%
GW14	1.74×10^{-4}	1.35×10^{0}	0.055636	19	0.713451	15	1.83×10^{-4}	3.24×10^{-1}	0.05622	92	0.713659	36	−209	2.93%
GW15	1.45×10^{-4}	1.12×10^{0}	0.055918	23	0.713483	14	4.90×10^{-4}	3.13×10^{-1}	0.05622	89	0.713724	31	−241	3.38%
GW16	1.97×10^{-4}	1.81×10^{0}	0.055276	14	0.710495	13	1.38×10^{-4}	5.18×10^{-1}	0.05626	47	0.710666	28	−171	2.41%
GW17	8.88×10^{-5}	1.77×10^{0}	0.055323	14	0.709783	10	6.73×10^{-4}	1.27×10^{0}	0.05641	22	0.709874	13	−90	1.27%
GW19	1.03×10^{-4}	1.71×10^{0}	0.055184	15	0.710320	12	1.36×10^{-4}	3.67×10^{-1}	0.05623	73	0.710530	32	−210	2.96%
GW20	3.63×10^{-4}	2.64×10^{0}	0.055185	9	0.713835	9	3.34×10^{-4}	1.15×10^{0}	0.05643	23	0.713925	17	−90	1.25%
GW21	2.59×10^{-4}	1.94×10^{0}	0.055441	14	0.713288	12	1.71×10^{-4}	4.65×10^{-1}	0.05625	58	0.713477	29	−189	2.65%
GW22	2.49×10^{-4}	2.13×10^{0}	0.055344	12	0.710003	13	8.12×10^{-5}	6.32×10^{-1}	0.05639	45	0.710121	26	−118	1.66%
GW23	1.18×10^{-4}	2.17×10^{0}	0.055314	11	0.709990	12	1.57×10^{-4}	5.89×10^{-1}	0.05634	43	0.710117	25	−127	1.79%
GW24	9.39×10^{-5}	2.27×10^{0}	0.055256	12	0.709972	9	6.58×10^{-5}	5.72×10^{-1}	0.05632	39	0.710128	26	−156	2.20%
Standards						2SD (n)						2SD (n)		
SRM987											0.710244	33 (6)		
7CS					0.708736	2 (2)								
CASS-6					0.709196	39 (2)					0.709302	57 (4)	−106	1.49%
NASS-7					0.709186	70 (2)					0.709351	44 (4)	−165	2.33%

[a] $^{87}Sr/^{86}Sr$ are reported as two times the internal standard error (2SE) from 50 cycles of sample signal collection, or the 2SD of the population in the case of standards used for constraining long-term reproducibility across multiple analytical sessions. ^{85}Rb and ^{86}Sr (volts) were monitored on the Neptune for each sample to constrain Rb/Sr in analyte solutions.

This journal is © The Royal Society of Chemistry 2025

Open Access Article. Published on 06 June 2025. Downloaded on 11/11/2025 6:44:59 AM.
This article is licensed under a Creative Commons Attribution 3.0 Unported Licence.

Table 3 $^{87}Sr/^{86}Sr$ values of CASS-6 and NASS-7, and SRM987 reported for comparison

	CASS-6	NASS-7	SRM987
This study	0.709196 ± 39[a]	0.709186 ± 70[a]	
	0.709302 ± 57[b]	0.709351 ± 44[b]	0.710244 ± 33[b]
Phan *et al.* (2021)[45]		0.70918 ± 6	
Plechacek *et al.* (2022)[46]	0.709165 ± 16		
Zaky *et al.* (2018)[47]	0.709167 ± 9		
De Muynck *et al.* (2009)[48]			0.710260 ± 67
Thirlwall (1991)[49]			0.710248 ± 11
Meynadier *et al.* (2006)[32]			0.710277 ± 28
			0.710243 ± 2
McCoy-West *et al.* (2016)[42]			0.710242 ± 12
Balcaen *et al.* (2005)[50]			0.710251 ± 13
Galler *et al.* (2008)[51]			0.71030 ± 22

[a] Manual IEC. [b] Automated HPIC.

scope of the current work, it is a near certainty that the manual IEC protocol developed herein could be easily converted for use with a vacuum manifold system. Lastly, our protocol could be adapted with limited to nil change to that detailed in Wall *et al.* (2013). Doing so would further reduce the sample processing times by the use of vacuum box and no post-IEC sample dry-down and reflux, making it potentially viable to receive, process and analyze 40–50 water samples for $^{87}Sr/^{86}Sr$ all within a 24 hour period.

Future work with manual IEC will focus on converting the above methodology to vacuum box systems, as well as to exploring modification of the workflow to allow for direct acidification and analysis of Sr separates after IEC to circumvent the additional rate-limiting step of post-IEC dry-down and reflux for MC-ICP-MS analysis. In particular, future conversion to a vacuum box system will focus on direct placement of pipette tip columns (or similar single-piece column) into the vacuum manifold, further and greatly reducing the number of consumables required. Once the workflow has been fully optimized for natural water samples, it can be readily adapted to other sample media as needed, *e.g.* in agricultural, geological and forensics applications.

3.3 Optimizing automated Sr separation

After initial testing of the Thermo Scientific™ Dionex™ Combined 6-cation Standard-II provided, it was recognized that it is important to understand the separation of Rb, as in addition to Ca this is a key interferent for reliable $^{87}Sr/^{86}Sr$ determination. Furthermore, in accordance with common water collection protocols, it was necessary to develop a standard solution in representative dilute HNO_3. As such, a 7-cation in-house standard (7CS) in 0.09 mol per L HNO_3 was developed to characterize separation of Li, Na, K, Mg, Rb, Ca, and Sr. Moreover, while the automated protocol herein builds upon the earlier work of Meynadier *et al.* (2006), the new Dionex model could be programed to add a step increase in MSA concentration which provides more effective separation of Ca and Sr. Strontium elutes out after Ca due to their similar chemical properties (ionic radii) which causes both elements to interact similarly with the resin, making it challenging to separate the Sr cleanly from the Ca peak (especially when Ca is present in high concentration). As such, herein a step increase from 40 to 50 mM MSA was introduced at 11–18 minutes (step-gradient time window) to provide optimal separation of Ca and Sr. A typical elution profile generated for the 7-cation in-house standard is illustrated in Fig. 2a, and for a natural groundwater sample with significantly less Sr in Fig. 2b.

Optimization of the automated technique focused on three major attributes – integration with international water collection protocols, minimization of cross-contamination, and optimized Sr separation efficiency from adjacently eluting and interferent matrix elements (*i.e.* Ca).

As detailed above, the majority of water collection protocols defined by international industry/government organization specify filtration of field water samples using 0.45 μm water filtration membranes, and acidification of water samples with dilute nitric acid (to pH of approximately 1–2) to arrest growth of organics and/or precipitation of solids.[54] Here, all natural groundwater samples were filtered with 0.45 μm membranes and acidified according to volume (*i.e.* not exact/titrated molarity); this was done in order to simulate the least stringent conditions to develop the automated technique with minimal sensitivity to these likely variables. The two internationally recognized CRMs used (CASS-6 and NASS-7) were processed as is (each already filtered and acidified as part of developer production). Of important note, because of acidification in dilute HNO_3, it follows that Sr separation in the protocol developed herein occurs in a mixed media of dilute HNO_3 (0.09 mol L^{-1}) and MSA.

Meynadier *et al.* (2006) noted significant so-called "memory effects" using a predecessor automated system (*i.e.* contamination of prior samples into current ones in the automated sequence). However, subsequent studies[30–32] on more recent platforms like that herein, have shown that, due to advancements in valve construction, cross-contamination can be effectively mitigated or altogether avoided by the injection of blanks (*i.e.* here 0.09 mol per L HNO_3) in between sample injections. This issue was investigated herein to ensure sufficiently low so-called "memory effects" between samples in the HPIC system (hereafter referred to as intra-sample blanks, quantified

Open Access Article. Published on 06 June 2025. Downloaded on 11/11/2025 6:44:59 AM.
This article is licensed under a Creative Commons Attribution 3.0 Unported Licence.

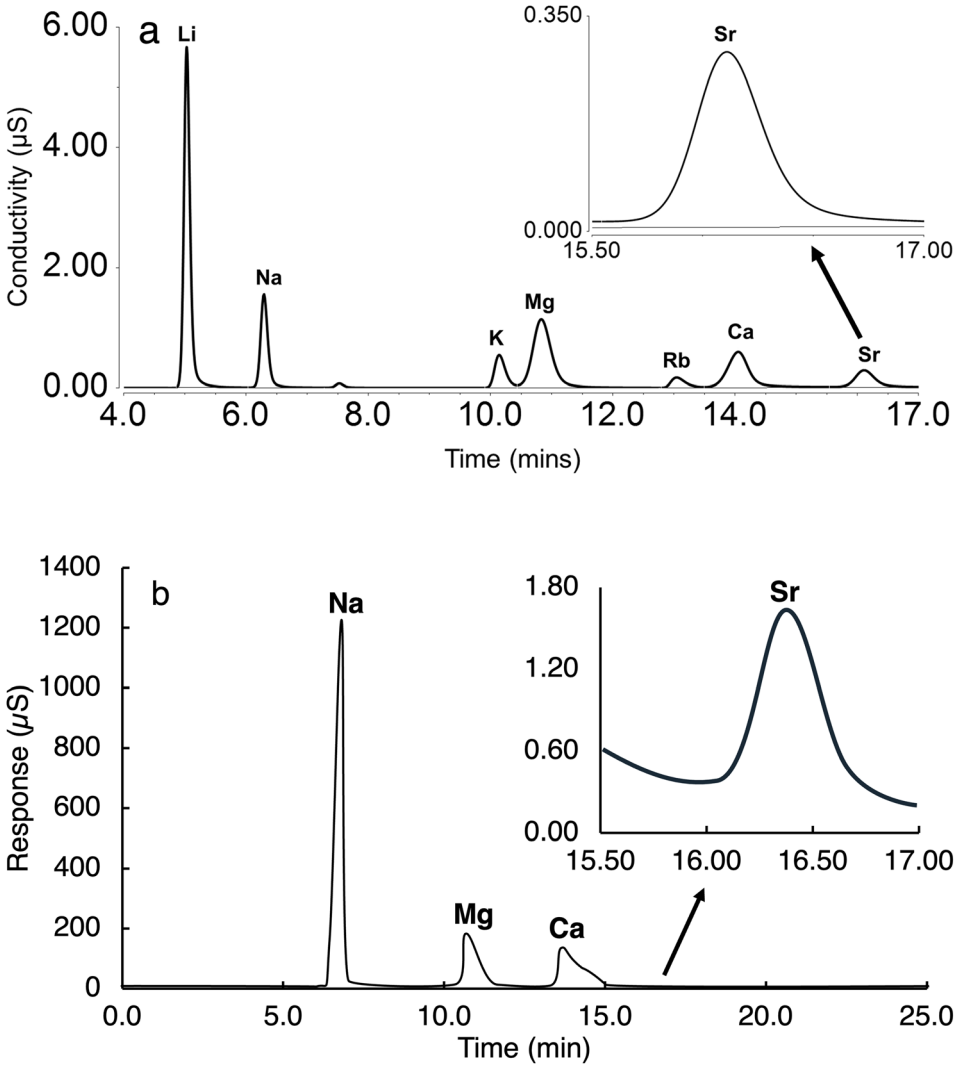

Fig. 2 (a): Chromatograph of 7-cation standard showing the separation of common cations. Normal run sequence (per injection) is 25 minutes at a flowrate of 0.36 mL min^{-1}. (b) Chromatograph of a typical natural groundwater samples. The blue bar shows the collection time window which sends a signal to the fraction collector to collect the Sr fraction. Green enlarged pop-out shows the Sr conductivity peak (on trailing tail of Ca peak).

canonically as ng Sr), even for the most matrix-heavy samples. To address this, a small subset of 5 natural groundwater samples were processed through HPIC Sr separation where either one intra-sample blank (method 1: one blank injection wash between samples) or two intra-sample blanks (method 2: two blank injection washes between samples) 0.09 mol per L HNO_3 were introduced in sequence between true samples. Statistical agreement with $^{87}Sr/^{86}Sr$ determined *via* manual IEC was better for sample injections preceded by two intra-sample blank injections (Table 4), and the use of two intra-sample blanks sufficiently cleans the HPIC tubing, valve and column circuit (see below) and therefore is the method used throughout the current work. Subsequently, intra-sample blanks were monitored for natural groundwater samples herein, with ng Sr for both the first and second blank injections quantified and reported in the ESI.†

Table 4 Strontium intra-sample blanks (ng) from 1 blank (method 1) *vs.* 2 blanks (method 2) injections in between samples on the automated HPIC

	Method 1		Method 2			
Sample	Injection 1	Blank%	Injection 1	Blank%	Injection 2	Blank%
GW8	16.36	1.31%	6.75	0.54%	0.79	0.06%
GW9	2.92	1.62%	11.81	6.57%	0.84	0.47%
GW10	3.29	1.86%	1.52	0.86%	0.28	0.16%
GW11	2.27	1.55%	1.41	0.96%	0.23	0.15%
GW12	1.89	1.26%	1.63	1.08%	0.11	0.07%

Table 4 presents Sr levels in intra-sample blanks (ng) ("memory effects") between groundwater samples using the automated HPIC separation method. In method 1, where a single intra-sample blank was injected between samples, Sr levels were notably higher (*e.g.*, 16.4 ng for GW8 and 3 for GW9),

Open Access Article. Published on 06 June 2025. Downloaded on 11/11/2025 6:44:59 AM.
This article is licensed under a Creative Commons Attribution 3.0 Unported Licence.

leading to potential carryover. In contrast, method 2, which included two blank injections to clean the chromatographic column, significantly reduces Sr levels by the second injection (*e.g.*, down to 0.79 ng for GW8, and in general well below 0.5 ng Sr), demonstrating that a two-blank approach (method 2) effectively mitigates carryover contamination ("memory effects"). The residual Sr observed may stem from remnant sample solution in the capillary and valve circuitry, a known consideration when dealing with any type of automated system, and no different here (also see Meynadier *et al.*, 2006). While carryover levels remain higher than procedural blanks reported for conventional methods, they are still much lower than typical Sr concentrations in groundwater samples by 100-fold or more, constituting on average only 0.13% of sample Sr, and are thus considered highly acceptable for the applications herein, constituting much less than 1% of overall Sr and therefore contribute negligibly to measurement results. It is noted that this may require further improvement for analytical methodologies using TIMS and/or requiring maximum analytical precision.

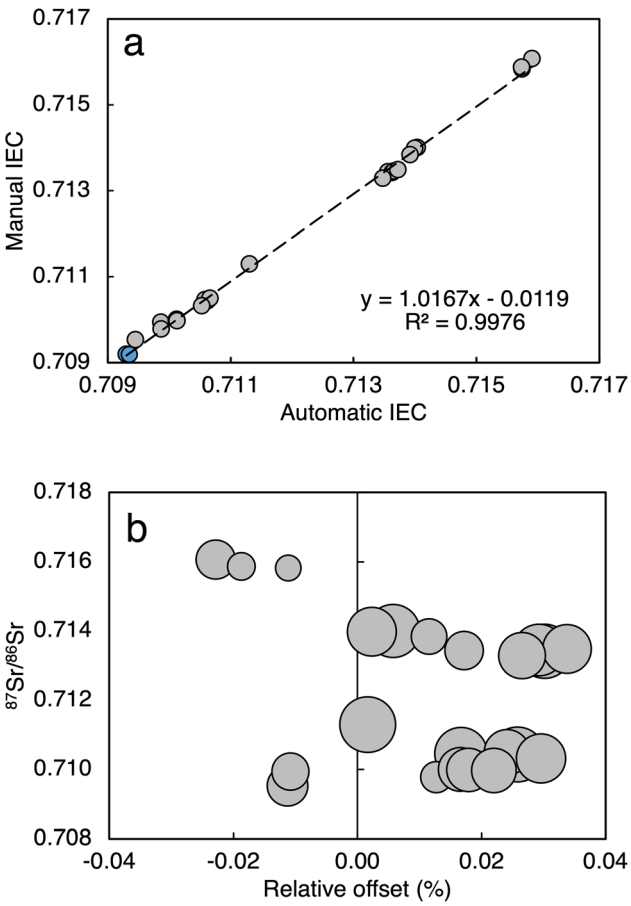

Fig. 3 (a): $^{87}Sr/^{86}Sr$ ratio values from automated HPIC manual IEC. Blue: water standards (n = 2, CASS-6 and NASS-7) and grey: groundwater samples (n = 24). (b) Relative% offset of $^{87}Sr/^{86}Sr$ between automated HPIC *vs.* manual IEC methodologies (with HPIC 2SE denoted by symbol size).

Results from the HPIC protocol for Sr purification faithfully reproduce literature values for standards and reference materials and furthermore reproduce true-to-life sample results from conventional manual IEC. Comparative results between manual and automated methods demonstrate excellent agreement, with a Pearson's R^2 greater than 0.997 (Fig. 3a).

Importantly, it is highly salient to note that HPIC Sr separation and post-chemistry acidification for MC-ICP-MS analyses herein were conducted in a high traffic mass spectrometry laboratory environment (*i.e.* ISO-8 or worse), not in an isotope geochemistry clean laboratory (ISO-7 or better). In this context, performance with respect to blank Sr contributions is considered excellent, and furthermore this greatly expands the viability of conducting HPIC Sr separation relative to manual IEC, as the HPIC methodology can be applied in a standard laboratory setting and does not require an ISO-7 or better clean laboratory environment (which are prohibitively expensive and relatively rare, especially outside academia).

Nevertheless, future work will focus on refining the method, such as optimizing gradient steps (*e.g.*, increasing MSA concentration), and/or inserting sub-method cleaning step between samples, to further reduce intra-sample blanks and enhance trace-level Sr analysis, however this must be balanced against the overall protocol duration, to remain focused on overall efficiency of the methodology as has been done herein.

Karasinski *et al.* (2016) demonstrated the feasibility of online Sr separation and isotopic analysis using a fully hyphenated HPIC-MC-ICP-MS system, utilizing a Dionex ICS-5000+ system while this study uses the upgraded ICS-6000 system with automated EG and fraction collection, enabling high-purity Sr isolation. Furthermore, the method in Karasinski *et al.* (2016) was limited by broader elution peaks (when using dry sample introduction to the MC-ICP-MS plasma), whereas the workflow developed herein minimizes contamination and could improve recovery, delivering higher precision and reproducibility for Sr isotopic measurements. Despite its innovation, the limitations present opportunities for future projects to refine the IC-MC-ICPMS setup. For instance, gradient elution programs could enhance separation for multi-isotope analyses (*e.g.*, Sr, Ca, and Rb), and system optimization for challenging matrices like brines or geothermal fluids could broaden its application.

In summary, the automated HPIC protocol developed herein provides significant innovations combining and building upon previous work,[30–32] to develop a robust and highly reproducible technique tailored for natural water samples of various matrices, and one that is highly translational and adaptable with respect to current water sampling practices. On the latter specifically, this optimized protocol allows for the introduction of filtered and acidified water samples across many protocols developed internationally by industry, consultancy and government organizations, and introduces a step increase in the MSA concentrations to maximize Sr separation from Ca. This protocol can process 40–50 sample injections in a 24 hour period with minimal human interaction (*e.g.* 1–2 hours to set-up automated sequence), and the Dionex™ IonPac™ CS16 column can process hundreds of samples or more before replacement (depending on the instrument method parameters and sample matrices). Moreover, this

Open Access Article. Published on 06 June 2025. Downloaded on 11/11/2025 6:44:59 AM.
This article is licensed under a Creative Commons Attribution 3.0 Unported Licence.

can all be accomplished without the need or use of an ISO-7 (or better) geochemistry clean laboratory, as the current work has demonstrated this can be done in a standard mass spectrometry lab (ISO-8 or worse). Cumulatively, these attributes mark the HPIC protocol herein with very high translational capacity for integration into existing water collection and analytical practices, while also being time-efficient and parsimonious with respect to reagent and consumables use, thereby also working towards sustainable lab practices.

Future work will focus on exploring further time and reagent optimization for the blank injections to further reduce the per-sample processing time on the Dionex system, and further streamlining/simplifying the analytical approach for MC-ICP-MS analyses to optimally align with throughput and scalability needs, as even the analytical uncertainties constrained herein are likely beyond what is required for some applications. Once the automated protocol has been fully optimized, exploration of its adaptation to other aqueous (*e.g.* biofluids, wine) and solid (*e.g.* carbonate, bone apatite) media can be pursued.

4. Conclusions

In this study, both manual and automated HPIC Sr separation protocols were optimized for sample preparation and subsequent $^{87}Sr/^{86}Sr$ isotope ratio determination, directly addressing a known and considerable throughput gap.

The streamlined manual IEC protocol developed herein eradicates traditional time-consuming steps such as pre-IEC sample dry-down and reflux. This reduces contamination potential and processing times by nearly a day, plausibly allowing for preparation and analyses of up to 30 samples within the same day as collection.

The novel automated HPIC Sr separation protocol builds upon prior work by optimizing MSA concentrations to improve Sr separation efficiency, particularly between Sr and Ca peaks. Moreover, this method was developed in mixed-media (0.09 mol per L HNO_3, MSA) such that it is fully compatible with standard international water collection procedures, supporting high-throughput analysis of 40–50 samples within 24 hours while minimizing operator intervention, reagents and consumables use, thus also promoting sustainable lab practices. An intra-sample cleaning protocol was optimized to reduce so-called "memory effects" to well below 1%. The protocol design is such that sample Sr separation and analyses by MC-ICP-MS can be accomplished within the same day as collection.

Both methodologies prioritize the needs of high-throughput and large-scale application requiring $^{87}Sr/^{86}Sr$, significantly advancing the Technology Readiness Level (TRL) of $^{87}Sr/^{86}Sr$ as a geochemical tool in uses such as water reservoir characterization/differentiation, agricultural source-tracing, critical resource exploration, forensics and beyond, this services needs across academia, government, industry and commerce. Moreover, the HPIC methodology can function in a standard laboratory environment (*i.e.* not an ISO-7 or better clean lab), highlighting the broad adoptability relative to manual IEC.

Data availability

The data supporting this article have been included as part of the ESI.†

Conflicts of interest

There are no conflicts of interest to declare.

Acknowledgements

The authors thank the Advanced Analytical Centre (AAC Townsville) at James Cook University, and Melbourne Analytical Geochemistry (in particular Dr Alan Greig), for facilitating analyses. The authors thank the Geological Survey of Queensland (GSQ) for partial funding, as the collection of groundwater samples and original $^{87}Sr/^{86}Sr$ characterization, a subset of which are used independently in this study, were collected as part of successful funding through GSQ's Collaborative Exploration Initiative (CEI; ROUND 5, CEI0341). GM and BM thank the JCU Early Career Researcher Grant scheme, which partially funded this project. BM thanks the School of Geography, Earth and Atmospheric Sciences for partial funding of this project. Finally, the authors wish to thank the Traditional Custodians of the Gudjal and Guga Badhun country (Charters Towers, Townsville).

References

1 C. M. Almeida and M. T. S. Vasconcelos, *J. Anal. At. Spectrom.*, 2001, **16**, 607–611.
2 C. N. Maréchal, P. Télouk and F. Albarède, *Chem. Geol.*, 1999, **156**, 251–273.
3 S. J. Romaniello, M. P. Field, H. B. Smith, G. W. Gordon, M. H. Kim and A. D. Anbar, *J. Anal. At. Spectrom.*, 2015, **30**, 1906–1912.
4 B. M. Mahan, F. Wu, A. Dosseto, R. Chung, B. Schaefer and S. Turner, *J. Anal. At. Spectrom.*, 2020, **35**, 863–872.
5 B. Mahan, R. S. Chung, D. L. Pountney, F. Moynier and S. Turner, *Cell. Mol. Life Sci.*, 2020, **77**, 3293–3309.
6 J. Ma, G. Wei, Y. Liu, Z. Ren, Y. Xu and Y. Yang, *Chin. Sci. Bull.*, 2013, **58**, 3111–3118.
7 K. Britton, M. Le Corre, M. Willmes, I. Moffat, R. Grün, M. A. Mannino, S. Woodward and K. Jaouen, *Front. Ecol. Evol.*, 2020, **8**, 579473.
8 S. Marchionni, E. Braschi, S. Tommasini, A. Bollati, F. Cifelli, N. Mulinacci, M. Mattei and S. Conticelli, *J. Agric. Food Chem.*, 2013, **61**, 6822–6831.
9 J. T. Brenna, T. N. Corso, H. J. Tobias and R. J. Caimi, *Mass Spectrom. Rev.*, 1997, **16**, 227–258.
10 R. H. Stanley, B. Baschek, D. E. Lott III and W. J. Jenkins, *Geochem., Geophys., Geosyst.*, 2009, **10**, Q05008.
11 P. Shand, D. F. Darbyshire, A. J. Love and W. M. Edmunds, *Appl. Geochem.*, 2009, **24**, 574–586.
12 R. H. McNutt, in *Environmental Tracers in Subsurface Hydrology*, Springer, 2000, pp. 233–260.

Open Access Article. Published on 06 June 2025. Downloaded on 11/11/2025 6:44:59 AM.
This article is licensed under a Creative Commons Attribution 3.0 Unported Licence.

13 A. J. McCoy-West, J. A. Baker, K. Faure and R. Wysoczanski, *J. Petrol.*, 2010, **51**, 2003–2045.
14 A. J. McCoy-West, N. Mortimer, K. W. Burton, T. R. Ireland and P. A. Cawood, *Gondwana Res.*, 2022, **105**, 432–449.
15 A. Paytan, E. M. Griffith, A. Eisenhauer, M. P. Hain, K. Wallmann and A. Ridgwell, *Science*, 2021, **371**, 1346–1350.
16 R. Andreasen and E. Thomsen, *Front. Ecol. Evol.*, 2021, **8**, 588422.
17 K. M. Frei and R. Frei, *Appl. Geochem.*, 2011, **26**, 326–340.
18 L. A. Chesson, B. J. Tipple, G. N. Mackey, S. A. Hynek, D. P. Fernandez and J. R. Ehleringer, *Ecosphere*, 2012, **3**, 1–17.
19 C. D. Frost and R. N. Toner, *Groundwater*, 2004, **42**, 418–432.
20 S. N. Höpker, H. C. Wu, F. Lucassen, O. Sadio, T. Brochier, I. Y. Nuworkpor, S. A. Kasemann, P. Merschel and H. Westphal, *Estuaries Coasts*, 2022, **45**, 1780–1802.
21 A. I. Török, A. Moldovan, C. Tănăselia, E. Kovacs, I. C. Mirea, O. T. Moldovan and E. A. Levei, *Water*, 2023, **15**, 1431.
22 X. He, P. Li, H. Shi, Y. Xiao, Y. Guo and H. Zhao, *Chemosphere*, 2022, **306**, 135594.
23 A. J. Wall, R. C. Capo, B. W. Stewart, T. T. Phan, J. C. Jain, J. A. Hakala and G. D. Guthrie, *J. Anal. At. Spectrom.*, 2013, **28**, 1338–1344.
24 M. J. Bickle, E. I. Stevenson and R. R. Haese, *Chem. Geol.*, 2020, **538**, 119489.
25 S. Swoboda, M. Brunner, S. Boulyga, P. Galler, M. Horacek and T. Prohaska, *Anal. Bioanal. Chem.*, 2008, **390**, 487–494.
26 S. Adams, R. Grün, D. McGahan, J. X. Zhao, Y. Feng, A. Nguyen, M. Willmes, M. Quaresimin, B. Lobsey and M. Collard, *Geoarchaeology*, 2019, **34**, 231–251.
27 S. Voerkelius, G. D. Lorenz, S. Rummel, C. R. Quétel, G. Heiss, M. Baxter, C. Brach-Papa, P. Deters-Itzelsberger, S. Hoelzl, J. Hoogewerff, E. Ponzevera, M. Van Bocxstaele and H. Ueckermann, *Food Chem.*, 2010, **118**, 933–940.
28 R. Cellier, S. Bérail, J. Barre, E. Epova, A.-L. Ronzani, C. Van Leeuwen, S. Milcent, P. Ors and O. F. X. Donard, *Molecules*, 2021, **26**, 5104.
29 T. Löffelmann, C. Snoeck, J. D. Richards, L. J. Johnson, P. Claeys and J. Montgomery, *PLoS One*, 2023, **18**, e0280589.
30 A.-D. Schmitt, S. Gangloff, F. Cobert, D. Lemarchand, P. Stille and F. Chabaux, *J. Anal. At. Spectrom.*, 2009, **24**, 1089–1097.
31 D. Razionale, R. N. Bryant and C. L. Blättler, *Rapid Commun. Mass Spectrom.*, 2022, **36**, e9249.
32 L. Meynadier, C. Gorge, J.-L. Birck and C. J. Allègre, *Chem. Geol.*, 2006, **227**, 26–36.
33 J. Karasinski, E. Bulska, M. Wojciechowski, A. A. Krata and L. Halicz, *J. Anal. At. Spectrom.*, 2016, **31**, 1459–1463.
34 P. Galler, A. Limbeck, S. F. Boulyga, G. Stingeder, T. Hirata and T. Prohaska, *Anal. Chem.*, 2007, **79**, 5023–5029.
35 A. Retzmann, T. Zimmermann, D. Pröfrock, T. Prohaska and J. Irrgeher, *Anal. Bioanal. Chem.*, 2017, **409**, 5463–5480.
36 C. Brach-Papa, M. Van Bocxstaele, E. Ponzevera and C. R. Quétel, *Spectrochim. Acta, Part B*, 2009, **64**, 229–234.
37 S. Ehrlich, I. Gavrieli, L.-B. Dor and L. Halicz, *J. Anal. At. Spectrom.*, 2001, **16**, 1389–1392.
38 Y.-H. Yang, F.-Y. Wu, L.-W. Xie, J.-H. Yang and Y.-B. Zhang, *Spectrochim. Acta, Part B*, 2011, **66**, 656–660.
39 C.-F. Li, J.-H. Guo, Z.-Y. Chu, L.-J. Feng and X.-C. Wang, *Anal. Chem.*, 2015, **87**, 7426–7432.
40 V. Balaram, W. Rahaman and P. Roy, *Geosystems Geoenvironment*, 2022, **1**, 100019.
41 B. Sundaram, A. Feitz, P. d. Caritat, A. Plazinska, R. Brodie, J. Coram and T. Ransley, *Geosci. Aust. Rec.*, 2009, **27**, 104.
42 A. J. McCoy-West, V. C. Bennett and Y. Amelin, *Geochim. Cosmochim. Acta*, 2016, **187**, 79–101.
43 E. P. Horwitz, R. Chiarizia and M. L. Dietz, *Solvent Extr. Ion Exch.*, 1992, **10**, 313–336.
44 B. L. A. Charlier, C. Ginibre, D. Morgan, G. M. Nowell, D. G. Pearson, J. P. Davidson and C. J. Ottley, *Chem. Geol.*, 2006, **232**, 114–133.
45 T. T. Phan, L. Fulton, J. Ulkem, S. Aiken, A. Blackwell, J. Walsh, P. Walker and F. Rezanezhad, *Environ. Adv.*, 2021, **3**, 100035.
46 A. Plechacek, S. R. Scott, M. B. Gotkowitz and M. Ginder-Vogel, *Appl. Geochem.*, 2022, **142**, 105332.
47 A. H. Zaky, U. Brand, D. Buhl, N. Blamey, M. A. Bitner, A. Logan, D. Gaspard and A. Popov, *Can. J. Earth Sci.*, 2018, **56**, 245–264.
48 D. De Muynck, G. Huelga-Suarez, L. Van Heghe, P. Degryse and F. Vanhaecke, *J. Anal. At. Spectrom.*, 2009, **24**, 1498–1510.
49 M. F. Thirlwall, *Chemical Geology: Isotope Geoscience Section*, 1991, **94**, 85–104.
50 L. Balcaen, I. D. Schrijver, L. Moens and F. Vanhaecke, *Int. J. Mass Spectrom.*, 2005, **242**, 251–255.
51 P. Galler, A. Limbeck, M. Uveges and T. Prohaska, *J. Anal. At. Spectrom.*, 2008, **23**, 1388–1391.
52 S. García-Ruiz, M. Moldovan and J. I. G. Alonso, *J. Anal. At. Spectrom.*, 2008, **23**, 84–93.
53 D. Weis, B. Kieffer, C. Maerschalk, J. Barling, J. De Jong, G. A. Williams, D. Hanano, W. Pretorius, N. Mattielli and J. S. Scoates, *Geochem., Geophys., Geosyst.*, 2006, **7**, Q08006.
54 S. Long and T. Martin, *Determination of Trace Elements in Waters and Wastes by Inductively Coupled Plasma-Mass Spectrometry: Method 200. 8. Version 4. 0*, Environmental Protection Agency, Cincinnati, OH (USA), 1989.