Green Chemistry

PAPER

View Article Online
View Journal | View Issue

Open Access Article. Published on 14 May 2025. Downloaded on 10/22/2025 9:20:45 AM.
This article is licensed under a Creative Commons Attribution 3.0 Unported Licence.

Check for updates

Cite this: *Green Chem.*, 2025, **27**, 6641

Re-wiring petrochemical clusters: impact of using alternative carbon sources for ethylene production†

James Tonny Manalal, *[a] Mar Pérez-Fortes [a] and Andrea Ramírez[b]

Received 27th November 2024,
Accepted 6th May 2025

DOI: 10.1039/d4gc06042c

rsc.li/greenchem

To achieve climate change mitigation targets, defossilising the production of bulk chemicals like ethylene will be critical. These high-volume petrochemicals are typically produced from fossil-based feedstocks in industrial clusters, which are highly integrated in terms of mass and energy. Replacing fossil-based processes in interconnected industrial clusters can, therefore, impact such interactions and decrease performance or cause lock-in situations at the cluster level. This has, however, been overlooked in the literature. This paper addresses this knowledge gap by evaluating the impacts of replacing fossil-based ethylene production in an existing industrial cluster with processes that use Alternative Carbon Sources (ACS) such as biomass, CO_2 and plastic waste. This study explicitly evaluates the performance of the ACS-based production routes at process and cluster levels by assessing changes in mass, energy, prices, CO_2 emissions and water demand. The results show that due to the notable difference in product distribution, energy needs and waste generation, a complete re-wiring of the petrochemical cluster in terms of mass, energy and revenue will be required. The results also indicate that defossilising ethylene production in existing industrial clusters can result in a shifting of burden outside the cluster for byproduct production, which can lead to increasing fossil-fuel use outside the cluster. At process level, the main challenges to defossilise ethylene are access to large quantities of clean energy and the large investment costs. Under current market conditions, among the different options examined, plastic pyrolysis is the most competitive ACS-based technology with the lowest impact at the cluster level. However, this requires a large availability of plastic waste, which will be challenging given current recycling rates. Further improvements in waste valorisation and integration of renewable energy-based heating will also be required to make this technology environmentally appealing.

Green foundation

1. This work evaluates the broader systemic or cluster level impacts on mass, energy, and price flows for defossilising ethylene production and advances the topic of green chemistry by providing actionable insights for policymakers and industry stakeholders.
2. The results of this work indicate that in the case of ethylene, it won't be a plug-and-play situation for defossilising the production of ethylene in an existing petrochemical cluster, as the alternative carbon source (ACS) based processes have highly different product distribution and need around 5 to 10 times higher area, electricity or water.
3. In future studies, the work can be expanded by exploring the systemic impacts of other promising technologies like bio-ethanol or bio-naphtha to ethylene, and studying the potential of valorising by-products to high value chemicals and integration of renewable energy for heating needs in the ACS-based processes.

1. Introduction

Defossilising[1] petrochemical feedstocks by using alternative carbon sources (ACSs) such as CO_2, biomass, and waste plastic is key to achieving climate neutrality targets.[2,3] Today, about 85% of all chemicals produced globally are made from fossil sources.[4] Fossil-based feedstocks like methane and naphtha are currently used for producing chemical building blocks (CBBs) like methanol, ethylene, propylene, benzene, toluene

[a]*Department of Engineering, Systems and Services, Faculty of Technology Policy and Management, Delft University of Technology, Jaffalaan 5, 2628BX, Delft, Netherlands. E-mail: j.t.manalal@tudelft.nl*
[b]*Department of Chemical Engineering, Faculty of Applied Sciences, Delft University of Technology, Van der Maasweg 9, 2629 HZ Delft, Netherlands*
† Electronic supplementary information (ESI) available. See DOI: https://doi.org/10.1039/d4gc06042c

Open Access Article. Published on 14 May 2025. Downloaded on 10/22/2025 9:20:45 AM.
This article is licensed under a Creative Commons Attribution 3.0 Unported Licence.

and xylene. These CBB chemicals can, however, also be produced from ACS-based feedstocks, which is expected to not only avoid fossil-fuel usage but also benefit the environment through carbon recycling.[5–8]

Several studies have looked into pathways, enablers and impacts of defossilising the chemical sector. For instance, Bazzanella *et al.*,[5] explored the transition of the European chemical industry to carbon neutrality. They identified several challenges, including the availability of low carbon energy and ACS feedstocks, high investment cost of ACS technologies, uncompetitive production costs of ACS-based chemicals and uncertainty regarding future policies.[5,6,9] They estimated the production costs of olefins from ACS-based processes to be two to five times higher than their fossil-based counterparts at current conditions.[5] They also concluded that for the European chemical industry to be carbon neutral by 2050, it will require around 4900 TW h low-carbon power, 50 to 300 Mt feedstock CO_2, 200 to 250 Mt dry lignocellulosic biomass, and an extensive additional investment of 800 to 900 billion Euro.[5] The range in the quantities of CO_2 and dry biomass is due to the differences in the intermediate (up to 59% reduction in CO_2 emissions) and ambitious (more than 95% reduction in CO_2 emissions) scenarios for the chemical industries in Europe.[5] Vogt *et al.*,[10] analysed possible pathways to make sustainable fuels (like diesel, kerosene) and chemicals (like olefins, aromatics) by defossilising all refineries by 2050 at global-level. They concluded that about 1400 Mt biomass (with a molecular weight of 30 g mol^{-1} C) and 630 Mt plastic waste (with a molecular weight of 14 g mol^{-1} C) will be needed to defossilise the 615 refineries worldwide. Kähler *et al.*[7] also pointed out that recycling (including chemical and mechanical recycling) will be the most important carbon source by 2050 and could contribute up to 55% of the global required carbon in the chemical industry. Their study acknowledged that the main type of ACS can change throughout regions due to feedstock availability, energy availability, access to technology, market conditions and that there will not be a one-size-fits-all solution.

Although these type of global level studies provide broad perspectives regarding the global impact of defossilising the chemical industry, location specific studies have also been conducted to understand the techno-economic and environmental impact of ACS at a regional level. As an example, Stork *et al.*,[11] analysed potential pathways to reduce 80–95% of greenhouse gas emissions in the Dutch chemical industry. They showed that using ACS feedstocks will be vital to reduce non-energy related (scope-1 and scope-3) emissions by 2050 and that around 26 Billion Euro will be required.[11] Schijndel *et al.*[12] examined a portfolio of technologies that included electrolysis, pyrolysis, gasification, fermentation, Fischer–Tropsch and methanol synthesis for the Dutch chemical production. They showed that by 2050, around 35 Mt of biomass and recycled plastic will be needed. The study also highlighted that even if the current renewable energy ambitions of the Netherlands would be achieved (70 GW wind and 100 GW solar energy by 2050), this would not be enough, as the required renewable energy demand by a defossilised chemical industry was estimated at 300 TW h. In a more site-specific study, Samadi *et al.*[13] explored defossilisation options for chemical industries in the Port of Rotterdam (PoR). They considered water electrolysis, gasification, syngas hydrogenation and pyrolysis to produce base chemicals. The study showed that by 2050, about 9 Mt of dry biomass and 20–50 TW h of low carbon electricity are required to achieve carbon neutrality.[13] Even though these studies provide valuable insights regarding the pathways and bottlenecks for the transition of the Dutch chemical sector; they do not provide insights regarding the impacts of transitioning CBB chemicals in existing industrial clusters.

Among the CBB chemicals, ethylene has the largest global production[14] and the highest CO_2 emissions during production, due to the energy-intensive process of naphtha or ethane steam cracking.[15] Manuel *et al.*,[15] analysed the defossilisation of the Dutch CBBs, including ethylene, and found that synthetic naphtha from waste plastic was the preferred choice for high-value chemical production due to the significantly lower levelised cost of production compared to bio-based or hydrogen-based routes. However, currently, only 9% to 14% of plastics are globally recycled, and studies suggest that by 2050, a circular economy approach could only meet 20% to 30% of the synthetic naphtha demand.[9,16,17] Hence, other technologies such as methanol to olefins are gaining interest to fulfil future defossilisation goals for ethylene production.[16,18,19] Those studies have also shown that, without integrating ACS feedstock change along with renewable energy, the ACS technologies could result in a net increase in emissions and have unintended environmental impacts.[8]

There are, however, several important considerations present in state-of-the-art studies,[12,17,20] including those discussed before, which require further attention. First, simplified models of the production processes, including black box and linear models are often used, partly due to the low technology readiness level (TRL) of most ACS-based processes. A low TRL level implies high uncertainties in data, leading to large variations in the techno-economic and environmental impacts. For example, pyrolysis oil from waste plastic has different hydrocarbon fractions[21] and the current naphtha steam crackers can handle only a part of this hydrocarbon fraction (*i.e.*, hydrocarbon in the boiling range of 35 to 180 °C).[22] Studies such as by van Schijndel *et al.*,[12] assumed that the whole pyrolysis oil can be used as feedstock for ethylene production, which will lead to lower estimates of waste plastic needs or CO_2 emissions.

Second, chemical production plants are not stand-alone systems, as they produce by-products which are generally used as a feedstock or a source of energy by other units or plants (as shown in Fig. 1). Replacing the fossil feedstock will not only have techno-economic and environmental impacts for the process that is replaced, but might also cause cluster-level impacts due to the high system integration in the chemical sector.[10] Chemical production plants are generally allocated in industrial clusters, where mass and energy flows are

Open Access Article. Published on 14 May 2025. Downloaded on 10/22/2025 9:20:45 AM.
This article is licensed under a Creative Commons Attribution 3.0 Unported Licence.

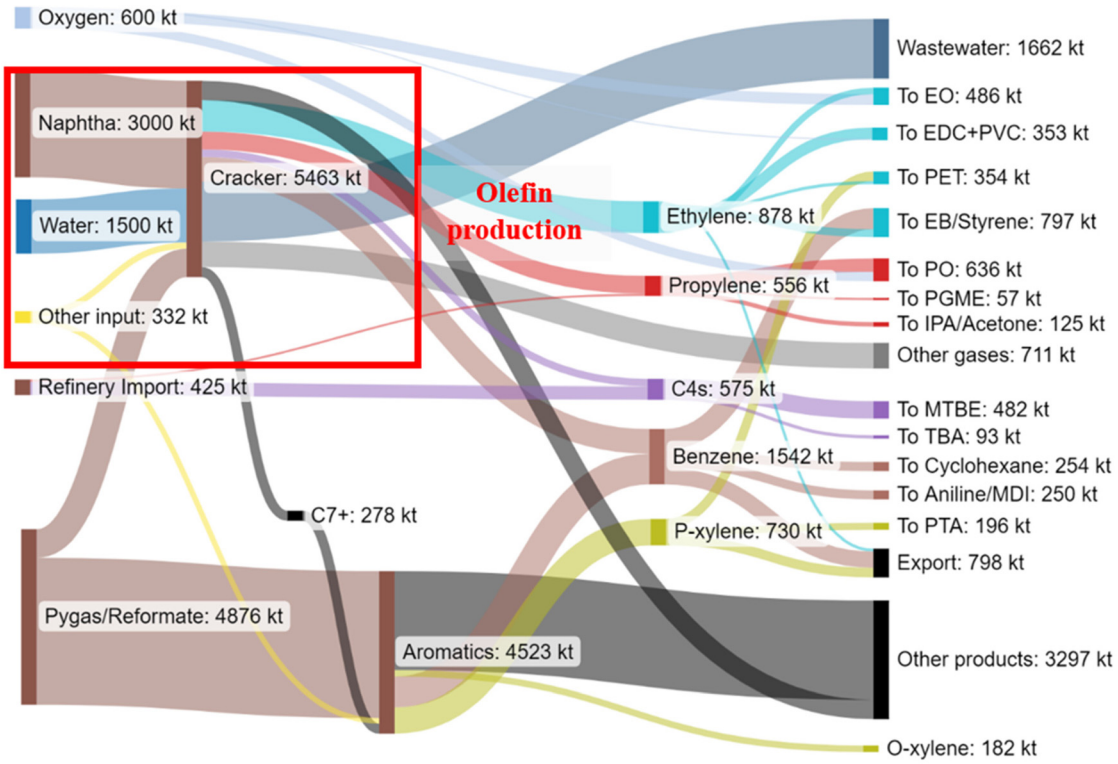

Fig. 1 Example of material flows in a conventional fossil-based petrochemical cluster for the production of ethylene (abbreviations: EO-ethylene oxide, EDC-ethylene dichloride, PVC-polyvinyl chloride, PET-polyethylene terephthalate, EB-ethylbenzene, PO-propylene oxide, PGME-propylene glycol methyl ether, IPA-isopropyl alcohol, MTBE-methyl *tert*-butyl ether, TBA-tert-butyl alcohol, MDI-methylene diphenyl diisocyanate, PTA-purified terephthalic acid).

exchanged with other plants.[23] Third, for the proper functioning of a chemical production plant, auxiliary units such as combined heat and power (CHP) plants, steam systems, and cooling water systems are critical.[24] Any change in production processes due to the use of ACS feedstock can impact equipment land footprint, scope-2 CO_2 emissions and secondary water demand. To date, these impacts have not been well studied in the literature[13,25–36]

This paper aims to address these three knowledge gaps, by evaluating the techno-economic impacts of displacing fossil-based ethylene production in an existing industrial cluster with processes that use ACS feedstocks. This study explicitly evaluates the performance of the production routes at process and cluster levels by assessing changes in (1) the dependency on import and/or export (changes in mass and energy flows in the cluster), (2) cascading impact of changes in ethylene price throughout different value-chains, (3) changes in CO_2 emissions and water demand.

2. Methodology

To study the impacts of defossilising ethylene production in an existing petrochemical cluster, the current situation in the Port of Rotterdam (PoR) was used as a point of departure (reference case cluster). Potential ACS-based processes to produce ethylene were identified and modelled, mimicking industrial scale capacities. Impacts were evaluated both at process and cluster levels. Further details are provided below.

2.1 Reference case: fossil-based ethylene cluster

Material, energy and economic data for the reference case were obtained from an in-house model of a petrochemical cluster in the PoR as described in Tan *et al.*[23] Each individual process was modelled at plant level in Aspen Plus v12. In total, the in-house model includes 57 chemical processes and their energy islands. In this study, we focus on the ethylene cluster, as shown in Fig. 2 (the red, blue and green lines represent ethylbenzene, ethylene oxide and ethyl dichloride value-chains).

The Naphtha steam cracker in the reference case produces about 900 kt per year ethylene, 500 kt per year propylene and 700 kt per year benzene. Steam cracking involves the high-temperature pyrolysis (at 850 °C) of saturated hydrocarbons in the presence of steam.[37] During steam cracking, a wide range of lower hydrocarbons are produced, mainly methane, ethylene, ethane, acetylene, propylene, propane, butene, butadiene, benzene, toluene, xylene, ethylbenzene, methyl hexane and methyl heptane.[37] After the steam cracking (as shown in Fig. 3), the hydrocarbon mixture undergoes downstream purification to remove impurities (*e.g.* CO_2, H_2S, H_2O) followed by complex separation processes (*e.g.*, high pressure cryogenic distillation and extractive distillation) to separate the individ-

Open Access Article. Published on 14 May 2025. Downloaded on 10/22/2025 9:20:45 AM.
This article is licensed under a Creative Commons Attribution 3.0 Unported Licence.

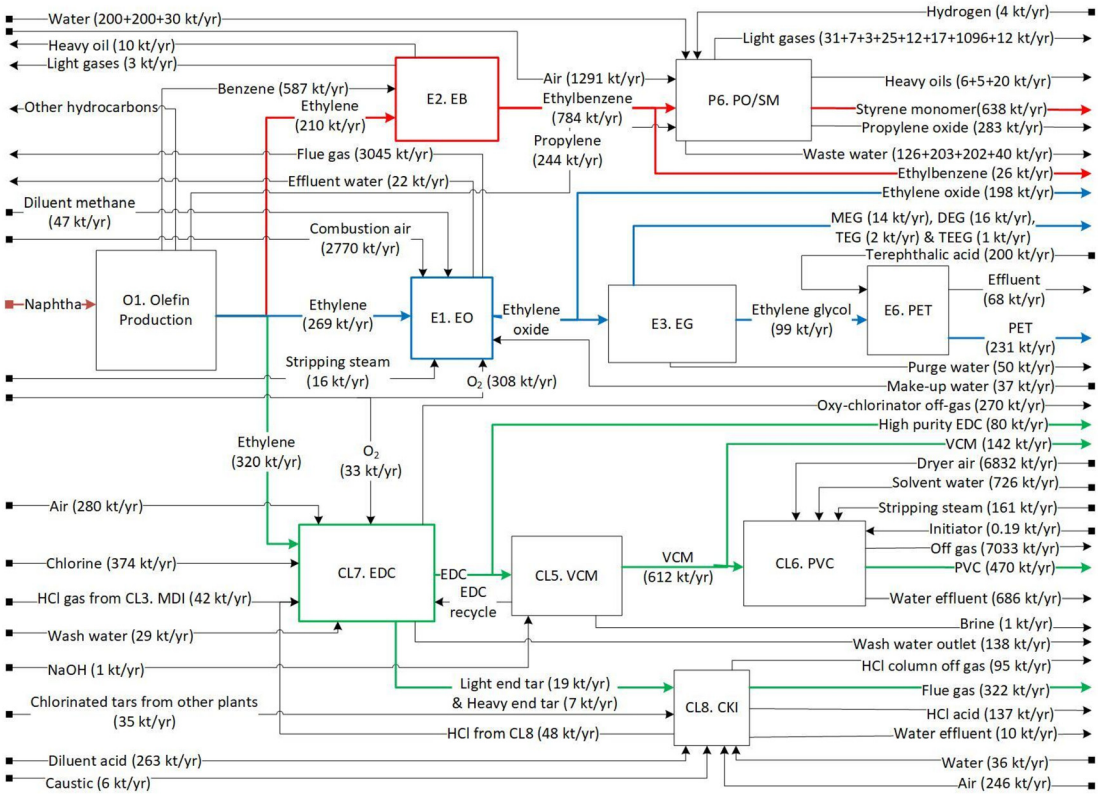

Fig. 2 Mass flows in the reference case ethylene cluster (abbreviations: EO-ethylene oxide, EDC-ethylene dichloride, PVC-polyvinyl chloride, PET-polyethylene terephthalate, EB-ethylbenzene, PO-propylene oxide, SM-styrene monomer, EG-ethylene glycol, MEG: monoethylene glycol, DEG: diethylene glycol, TEG: triethylene glycol, TEEG: tetra-ethylene glycol, VCM-vinyl chloride monomer, CKI-chlorine incineration). The numbers in brackets indicates the mass flow in kt per year.

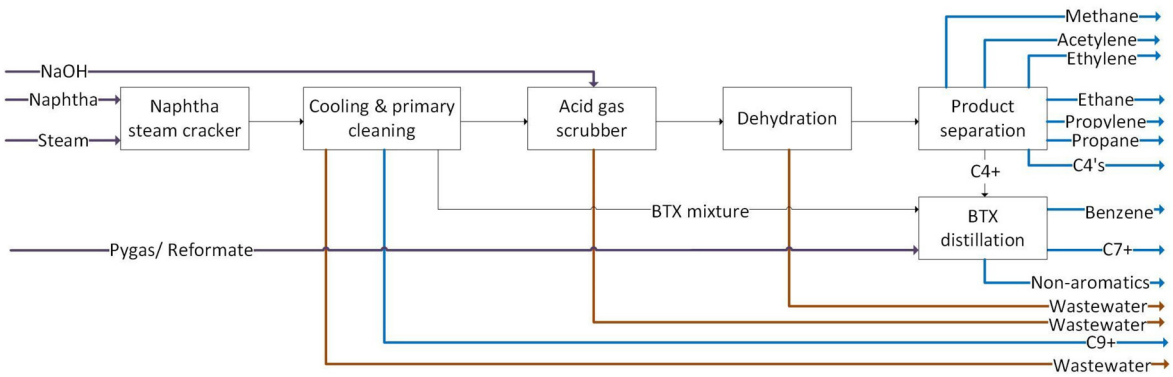

Fig. 3 Block flow diagram of Naphtha steam cracker process (abbreviation: BTX-benzene, toluene and xylene).

ual components into high purity products.[37] Fig. 3 shows the simplified block flow diagram of the model used in this study. The detailed process flow diagram (PFD), modelling assumptions, mass balance, energy balance, economic calculations and data sources is provided in Appendix A.

In the in-house petrochemical cluster, we explicitly model the energy islands mimicking existing conditions in the PoR. Note that in many cases the existing energy islands provide steam and electricity to more than one process. Fig. 4 shows the energy island of the reference olefin plant, which includes the electricity, heating and cooling flows/needs, the associated flows of energy to different processes, and the CHP plant. Further detailed of energy and mass balances of the different processes can be seen in Tan *et al.*[23]

2.2 Ex-ante ACS process modelling

To defossilise ethylene production, ACS-based ethylene production processes were modelled to match the 900 kt per year ethylene demand in the cluster. Table 1 shows the six ACS-based ethylene production routes that were included in this

Open Access Article. Published on 14 May 2025. Downloaded on 10/22/2025 9:20:45 AM.
This article is licensed under a Creative Commons Attribution 3.0 Unported Licence.

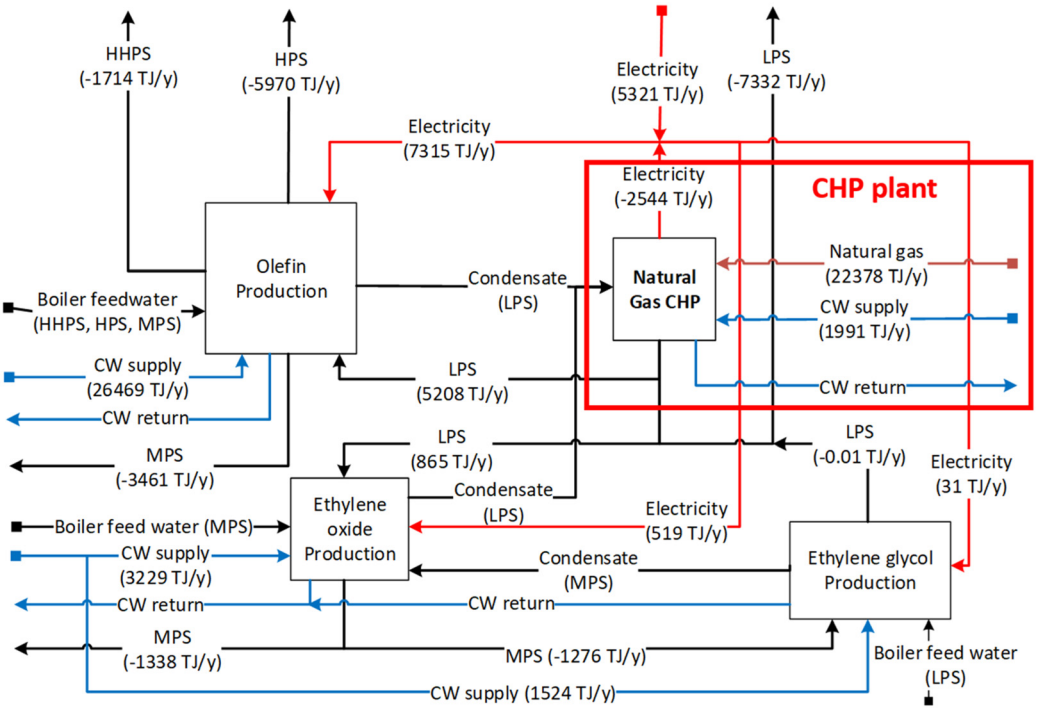

Fig. 4 Energy island of reference case fossil-based petrochemical cluster for the production of ethylene (*Note*: negative sign refers to heat or electricity production and positive sign refers to heat or energy need).

Table 1 ACS-based processes for ethylene production included in this study

Alternative carbon source technologies and their TRLs		
CO_2 routes Direct electrochemical	Biomass routes Fischer Tropsch ± methanol to olefin	Waste plastic routes Pyrolysis ± cracking
- Direct electrochemical reduction of CO_2-H_2O to ethylene [TRL = 4]	- Biomass steam gasification to syngas [TRL = 7] - Water electrolysis [TRL = 8] - Syngas to Fischer Tropsch[a] [TRL = 9] - CO_2 hydrogenation to methanol[a] [TRL = 7] - Methanol to olefin[a] [TRL = 8]	- Plastic low temperature pyrolysis [TRL = 7] - Water electrolysis [TRL = 8] - Pyrolysis oil steam cracking [TRL = 7]
Methanol to olefin - CO_2 hydrogenation to methanol [TRL = 7] - Water electrolysis [TRL = 8] - Methanol to olefin [TRL = 8]	**Methanol to olefin** - Biomass steam gasification to syngas [TRL = 7] - Water electrolysis [TRL = 8] - Syngas to methanol [TRL = 9] - Methanol to olefin [TRL = 8]	**Methanol to olefin** - Plastic steam gasification to syngas [TRL = 8] - Syngas to methanol [TRL = 9] - Methanol to olefin [TRL = 8]

[a] The Fischer Tropsch and methanol to olefin based production processes occur in parallel and the process configuration is detailed in ESI section S2.†

study together with the TRL of the different steps. For the ACS-based processes, due to time and resource constrains, only two promising technologies from each feedstock were selected using the screening methodology which considered the indicators TRL, number of reaction steps, ideal heat and electricity needs; based on our previous work.[38]

The technologies in the ACS-based processes were modelled using Aspen Plus and Aspen Economic Analyzer V12. All models reached an ethylene purity of 99.9 wt% and have a production capacity of about 300 kt per year, equivalent to 1/3rd of the demand in the PoR, which is ambitious for ACS-based technologies while still being industrially relevant capacities.[23] The performance of the different routes were evaluated at process and cluster level for 300 kt and 900 kt ethylene per year, respectively, using the indicators explained in section 2.3. A short description of the different technologies in each route is provided in ESI section S2† and the detailed assumptions, mass balance, energy balance, economics and data sources for each technology can be found in the Appendix A.

2.3 Process and cluster level impacts

ACS processes for ethylene production were compared using techno-economic and environmental key performance indicators (KPIs). At process level, KPIs were based on process

Open Access Article. Published on 14 May 2025. Downloaded on 10/22/2025 9:20:45 AM. This article is licensed under a Creative Commons Attribution 3.0 Unported Licence.

Table 2 Process and cluster level techno-economic and environmental KPIs considered in this study

Assessment level	Key performance indicators		
	Technical	Economic	Environmental
Process level	• Process complexity (process temperature range, process pressure range, single pass conversion, bare equipment area) • Product yields and product purity • Heating, cooling and electricity (utility needs)	• CAPEX • OPEX • Minimum selling price (MSP)	• Scope-1 and scope-2 CO_2 emissions • Primary and secondary water demand • Carbon utilisation efficiency (CUE)
Cluster level	Import or export dependency impacts (feed, products, utility): • Change in mass flows[a] • Change in energy flows	• CAPEX • Change in MSP[a]	• Scope-1 and scope-2 CO_2 emission • Primary and secondary water demand

[a] Change with respect to the reference case.

complexity, process performance, utility needs, economics, CO_2 emissions and water demand (as shown in Table 2). The ACS-based processes to produce ethylene were first analysed as stand-alone using process level KPIs. In a second step, they were introduced into the reference case cluster by substituting the fossil-based plant. At cluster level, the KPIs used were based on changes in mass flow, energy flow, price, CO_2 emissions and water demand with respect to the reference case (as shown in Table 2).

All processes were modelled in Aspen Plus considering the heating and cooling utilities as given in Table 3. The heat integration strategy used in this study was to heat or cool the process streams step-wise using the different utilities, to calculate the net utility need or production.

CAPEX was calculated departing from the bare equipment costs obtained from Aspen Economic Analyzer for the different unit models and using estimates from Towler & Sinnott[24] (as shown in ESI Table S6†). The fixed OPEX estimate was based on Towler & Sinnott[24] (as shown in ESI Table S6†). The variable OPEX was calculated based on mass and energy flows obtained from the Aspen Plus models. Price data[39,40] was adjusted to the base year 2018 by using the chemical producer price index[41] (as given in ESI Table S7†). The equipment life was assumed 25 years except in the case of proton exchange membrane (PEM) water electrolyzers (9 years)[42] and CO_2 electrolyzers (assumed to be 5 years based on past industrial scale PEM electrolyzer equipment life).[43] Only the electrolyser stack was replaced during the plant life and both the electrolyser stack cost was assumed to be 30% of total electrolyzer cost.[44] The minimum selling price (MSP) was calculated for 8% return on investment (ROI) with CAPEX, OPEX and revenue. For multi-product processes, the MSP was calculated by using revenue

Table 3 Heating and cooling utilities considered in this study

Heating utilities		Cooling utilities	
Type	Conditions	Type	Conditions
R50 generation	Saturated vapor to liquid methane at 1.02 bar	HHPS generation	Saturated liquid to steam at 500 °C and 100 bar
R1150 generation	Saturated vapor to liquid ethylene at 1.02 bar	HPS generation	Saturated liquid to steam at 51 bar
R134a generation	Saturated vapor to liquid 1,1,1,2-tetrafluoroethane at 1.02 bar	MPS generation	Saturated liquid to steam at 21 bar
Chilled water generation	16 wt% propylene glycol-water mixture from 7.5 °C to 5 °C at 1.02 bar	LPS generation	Saturated liquid to steam at 5.5 bar
Low-low pressure steam (LLPS)	Saturated steam to liquid at 3.9 bar	LLPS generation	Saturated liquid to steam at 3.9 bar
Low pressure steam (LPS)	Saturated steam to liquid at 5.5 bar	Cooling water	25 °C to 40 °C at 1.02 bar
Medium pressure steam (MPS)	Saturated steam to liquid at 21 bar	Chilled water	16 wt% propylene glycol-water mixture from 5 °C to 7.5 °C at 1.02 bar
High pressure steam (HPS)	Saturated steam to liquid at 51 bar	R134a	Saturated liquid to vapor 1,1,1,2-tetrafluoroethane at 1.02 bar
High-high pressure steam (HHPS)	Steam at 500 °C and 100 bar to saturated liquid	R1150	Saturated liquid to vapor ethylene at 1.02 bar
Natural gas or high temperature (HT) utility	81.4 wt% methane, 1 wt% CO_2, 14.4 wt% N_2, 3 wt% ethane, 0.2 wt% propane at 15 °C and 1.02 bar	R50	Saturated liquid to vapor methane at 1.02 bar

HT utility– High temperature utility is used when the heat need is greater than 350 °C and in this study natural gas with a lower heating value of 37.8 MJ kg^{-1} was used.

Open Access Article. Published on 14 May 2025. Downloaded on 10/22/2025 9:20:45 AM. This article is licensed under a Creative Commons Attribution 3.0 Unported Licence.

allocation[38] as explained in our previous work.[38] The price calculation using the revenue allocation was used only for the hydrocarbon product streams.

To calculate the scope-2 emissions of both the fossil-based and ACS-based processes, a natural gas based combined heat and power (CHP) plant with a CO_2 intensity of 0.076 ktonne CO_2 per TJ for electricity and 0.073 ktonne CO_2 per TJ for steam were used. Furthermore, a renewable electricity source was assumed in addition to the CHP plant, to assess its impact on the CO_2 emission results. The assessment of this study does not include scope-3 emissions.

The primary water demand was calculated for each process by summing up the process water needs, for instance, as gasifying agent, stripping steam, dilution water and electrolysis water. To calculate the secondary water demand (defined in this study as the sum of make-up water for utilities); the cooling water and boiler feed water make-up needs were calculated. The cooling water make-up need was calculated by assuming a 2% make-up due to evaporation and blowdown losses.[45] The boiler feed water (BFW) make-up need was calculated by assuming 25% make-up due to blowdown and condensate losses.[46] Other water demand associated with feedstocks (like water need for biomass cultivation) were not considered in this study.

The carbon utilisation efficiency definition was introduced on previous work.[38] It is defined as the ratio between the amount of carbon in the products and the amount of carbon in the feedstock (eqn (1)).

$$\text{Carbon utilisation efficiency (CUE)} = \frac{\sum_{m=1}^{m=q} \text{mass flow of elementary carbon in product } (m)}{\sum_{n=1}^{n=r} \text{mass flow of elementary carbon in feedstock } (n)} \quad (1)$$

where, m: stands for the products, q for the numbers of products, r is the number of feedstocks and n stands for the carbon feedstock.

Note that the change in MSP in the cluster looks at the cascading impact on the prices of downstream products in the value chain as a consequence of changes in the price of ethylene. This type of assessment was introduced on previous work[38] (eqn (2)) and assumes that for the downstream value-chains, the price increase in ethylene or its derivatives is compensated by a price increase in their respective products, to maintain the same gross margin.

$$\sum_{i=1}^{i=a} \Delta[\text{product price } (i) \times \text{product mass flow } (i) = \sum_{j=1}^{j=b} \Delta\text{raw material cost } (j) \times \text{Raw material mass flow } (j) \quad (2)$$

where, i stands for the products, a for the number of products, j is the raw material, and b the number of raw-materials.

2.4 Sensitivity analysis

As most ACS-based routes are not yet commercial (as given in Table 1), data is highly uncertain. To explore the impact of uncertainty due to the data inputs and modelling assumptions on the calculated ethylene price of ACS-based processes, a sensitivity analysis was done. Only the uncertainty of ethylene price is discussed in this paper, as the main focus of this study was on ethylene production and because the prices of other by-products vary in the same percentage due to the use of the revenue allocation approach. For the sensitivity analysis, the main contributing factors from OPEX and CAPEX analysis were identified. Based on these major contributing factors and the main underlying assumption behind these factors, the sensitivity analysis on ethylene MSP was conducted by varying these assumptions within the state-of the-art upper and lower limit values (Table 4).

3. Results and discussion

3.1 Impacts of using ACS in the ethylene process

The ACS-based routes show considerable differences in techno-economic and environmental performances compared to the reference case (as shown in Tables 5 and 6) and indi-

Table 4 Variables used for the sensitivity analysis with their upper and lower limits (abbreviations: RME: rapeseed methyl ester, PEM: proton exchange membrane, EDTA: ethylenediamine tetra-acetic acid)

Variables used	Upper limit	Lower limit
Return on investment	12%	4%
Food grade CO_2 price	300 EUR per t	80 EUR per t
Biomass pellet price	400 EUR per t	50 EUR per t
Sorted waste plastic price	800 EURper t	400 EUR per t
Unsorted waste plastic price	500 EUR per t	100 EUR per t
RME solvent price	1000 EUR per t	350 EUR per t
Direct CO_2-H_2O to ethylene reduction electrochemical cell operating voltage	3.65 V	2 V
Direct CO_2-H_2O to ethylene reduction electrochemical cell operational life	25 years	5 years (with 50% component replacement)
Direct CO_2-H_2O to ethylene reduction electrochemical cell cost	1500 EURper kW	580 EUR perkW
PEM water electrolyser operating life	25 years	9 years (with 50% component replacement)
PEM water electrolyser cost	1060 EUR per kW	580 EUR per kW
Electricity price	84 EUR per MW h	11 EUR per MW h
EDTA solvent price	1340 EUR per t	500 EUR per t

Open Access Article. Published on 14 May 2025. Downloaded on 10/22/2025 9:20:45 AM.
This article is licensed under a Creative Commons Attribution 3.0 Unported Licence.

Table 5 Process level annual mass flow comparison of different ACS-based ethylene production processes

		Carbon Source						
		Naphtha	CO_2 based		Biomass based		Plastic based	
Parameter		Reference case	Direct electrochemical	Methanol to olefin	Fischer Tropsch + methanol to olefin	Methanol to olefin	Pyrolysis + cracking	Methanol to olefin
Raw materials	Carbon feedstock	1034 kt (naphtha)	1510 kt (CO_2)	4800 kt (CO_2)	6900 kt (biomass)	5160 kt (biomass)	5000 kt (sorted plastic waste)	1860 kt (municipal plastic waste)
	Water or steam	568 kt	2241 kt	5886 kt	6907 kt	5286 kt	813 kt	1320 kt
	Other feedstocks	279 kt	—	—	35 kt	18 kt	278 kt	—
Products	Ethylene	303 kt	329 kt	314 kt	301 kt	314 kt	303 kt	314 kt
	Propylene	172 kt	—	398 kt	298 kt	398 kt	172 kt	398 kt
	Benzene	237 kt	—	80 kt	136 kt	80 kt	237 kt	80 kt
	Other hydrocarbon products	363 kt	7 kt	335 kt	716 kt	647 kt	3173 kt	347 kt
	Oxygen	—	1955 kt	5226 kt	2533 kt	2004 kt	128 kt	—
Waste	Wastewater	573 kt	1338 kt	2735 kt	7056 kt	5315 kt	573 kt	1325 kt
	Hydrocarbon waste	—	—	1488 kt	112 kt	—	—	—
	Purge or off-gas	233 kt	122 kt	100 kt	1360 kt	712 kt	1035 kt	256 kt
	Char or ash	—	—	10 kt	1158 kt	868 kt	470 kt	88 kt
	Tar	—	—	—	172 kt	126 kt	—	372 kt
Process carbon utilisation efficiency		84%	69%	68%	39%	48%	74%	67%
Ethylene yield (ethylene to carbon feedstock mass %)		29%	22%	7%	4%	3%	6%	18%

Table 6 Detail of product mass flows of the different ACS-based processes (abbreviations: VGO: vacuum gas oil)

	Carbon source						
	Naphtha	CO_2 based		Biomass based		Plastic based	
Product mass flow	Reference case	Direct electrochemical	Methanol to olefin	Fischer Tropsch + methanol to olefin	Methanol to olefin	Pyrolysis + cracking	Methanol to olefin
Methane	143 kt	—	10 kt	248 kt	274 kt	143 kt	10 kt
Acetylene	6 kt	—	—	—	—	6 kt	—
Ethane	43 kt	—	9 kt	—	9 kt	43 kt	9 kt
Ethylene	303 kt	329 kt	314 kt	301 kt	314 kt	303 kt	314 kt
Ethanol	—	7 kt	—	—	—	—	—
Propane	4 kt	—	74 kt	55 kt	74 kt	4 kt	74 kt
Propylene	172 kt	—	398 kt	298 kt	398 kt	172 kt	398 kt
C4 mixture	74 kt	—	106 kt	154 kt	106 kt	74 kt	106 kt
Benzene	237 kt	—	80 kt	136 kt	80 kt	237 kt	80 kt
Diesel	—	—	—	—	—	1456 kt	—
VGO	—	—	—	—	—	1333 kt	—
C7+	101 kt	—	—	161 kt	—	101 kt	—
C9+	77 kt	—	—	—	—	77 kt	—
Non-aromatics	101 kt	—	—	98 kt	—	101 kt	—
Oxygen	—	1955 kt	5226 kt	2533 kt	2004 kt	—	—

cates that the defossilisation of ethylene production, is more than just equipment change.

In terms of mass flow, the ACS-based processes show significantly different raw-material needs, product distribution and waste generation due to the difference in feedstock elemental composition (as shown in Tables S1, S2, S3 and S4 in ESI†) and process efficiencies (Table 5). The differences also exist when looking at the same ACS feedstock. For instance, to produce the same quantity of ethylene, plastic waste pyrolysis requires almost 2.7 times higher feedstock than the plastic based methanol to olefin route. This is because even though the carbon utilisation efficiency of pyrolysis route (74%) is

Open Access Article. Published on 14 May 2025. Downloaded on 10/22/2025 9:20:45 AM.
This article is licensed under a Creative Commons Attribution 3.0 Unported Licence.

higher than that of the plastic methanol to olefin process (67%), the ethylene yield in the former case (6%) is considerably lower than the methanol to olefin-based process (18%). This can be explained by the differences in by-product production as shown in Table 6.

In terms of product distribution, the plastic based pyrolysis process is most similar to the reference case and the CO_2 based direct electrochemical process has the least similarity, as the CO_2 based direct electrochemical process is a single product technology while the others are multi-product based technologies. This difference in product distribution can impact downstream units in a highly interconnected cluster, which is discussed in section 3.2.

In terms of energy requirements (Table 7), most ACS-based processes produce sufficient heat energy from off-gas combustion and are energy self-sufficient in terms of heat, except for the plastic based methanol to olefin process. This process requires around 15 PJ per year additional high-temperature heat energy (>900 °C) and 17 PJ per year low-pressure steam, which are almost 8 to 10 times higher than the reference case. The high heat requirements are mostly due to two reasons: the high specific energy need for gasification and the low calorific value of off-gases. For example, the plastic based methanol to olefin process has a reaction energy of 11 MJ kg^{-1} ethylene, and the off-gas of the process has a lower net calorific value of 27 MJ kg^{-1}; compared to the reaction energy of 13 MJ kg^{-1} ethylene and lower net calorific value of 52 MJ kg^{-1} off-gas for the naphtha cracker. This low calorific value for the off-gas from plastic based methanol to olefin process is due to the presence of partially oxidised molecules like CO and CO_2 from gasification in the off-gas. To compensate for the low heating value, additional external heat or gas is thus needed in the plastic based methanol to olefin process. In the biomass-based process, even though the heat need is high (~100 MJ kg^{-1} ethylene or 30–40 PJ per year), there are significant amounts of off-gases and waste hydrocarbons, which can be internally combusted for energy. Consequently, the biomass-based processes are net heat producers.

The CO_2 based methanol to olefin route has the highest electricity need among all processes, which is almost 62 times higher than the reference case. Of this amount, about 92% of the requirement is for hydrogen generation through water electrolysis (as shown in Fig. 5). In the case of the biomass-based steam gasification route, it requires less electricity for hydrogen production through water electrolysis compared to the CO_2 based routes as shown in Fig. 5. However, due to presence of impurities (like methane) in the syngas, the biomass-based processes required more electricity for cryogenic distillation. As a consequence, the CO_2 and biomass-based routes show similar electricity needs of around 80–150 PJ per year.

An aspect that is often overlooked is the physical area that new processes would require. This is particularly important when considering their implementation in existing industrial clusters. In the ESI (Table S9†), the bare equipment areas of the different routes are shown. To produce about 300 kt per year ethylene, the biomass-based route has the largest land footprint while CO_2 based direct electrochemical process has the lowest. Note that compared to the reference case, all the ACS-based processes require more bare equipment area. In densely populated clusters, such as the PoR, this indicate that physical constrains can affect the potential of technologies.

It is also worth mentioning that even though all the process routes produced 99.9 wt% pure ethylene, their impurities are different (as shown in Table S10 ESI†). For example, in the reference case ethylene have impurities like acetylene, methane and ethane at ppm levels, while the CO_2 based direct electrochemical route have CO_2 and ethanol. These changes in impurities could potentially affect downstream units, and further research into these impacts needs to be conducted.

Table 7 Utility needs and production of different ACS-based processes for 300 kt per year ethylene production

	Carbon source						
		CO_2 based		Biomass based		Plastic based	
Utility need or production	Naphtha Reference case	Direct electrochemical	Methanol to olefin	Fischer Tropsch + methanol to olefin	Methanol to olefin	Pyrolysis + cracking	Methanol to olefin
Electricity	2.5 PJ per year	83.5 PJ per year	156.6 PJ per year	117.1 PJ per year	79.3 PJ per year	6.1 PJ per year	6.4 PJ per year
LLPS	—	—	−0.5 PJ per year	0.7 PJ per year	−0.5 PJ per year	—	—
LPS	1.8 PJ per year	−0.6 PJ per year	−4.9 PJ per year	−23.4 PJ per year	−4.9 PJ per year	−3.1 PJ per year	17.3 PJ per year
MPS	−1.2 PJ per year	−1.2 PJ per year	−2.7 PJ per year	−2.4 PJ per year	−7.9 PJ per year	−4.2 PJ per year	−9.4 PJ per year
HPS and HHPS	−2.7 PJ per year	—	−0.01 PJ per year	−30.3 PJ per year	−19.3 PJ per year	−33.6 PJ per year	−3.8 PJ per year
HT utility	—	—	—	—	—	—	15 PJ per year
Cooling water	9.1 PJ per year	15.7 PJ per year	46.1 PJ per year	10 PJ per year	73.5 PJ per year	12.8 PJ per year	25.5 PJ per year

Negative sign refers to heat production and positive sign refers to cooling, heating or electricity need respectively

Open Access Article. Published on 14 May 2025. Downloaded on 10/22/2025 9:20:45 AM.
This article is licensed under a Creative Commons Attribution 3.0 Unported Licence.

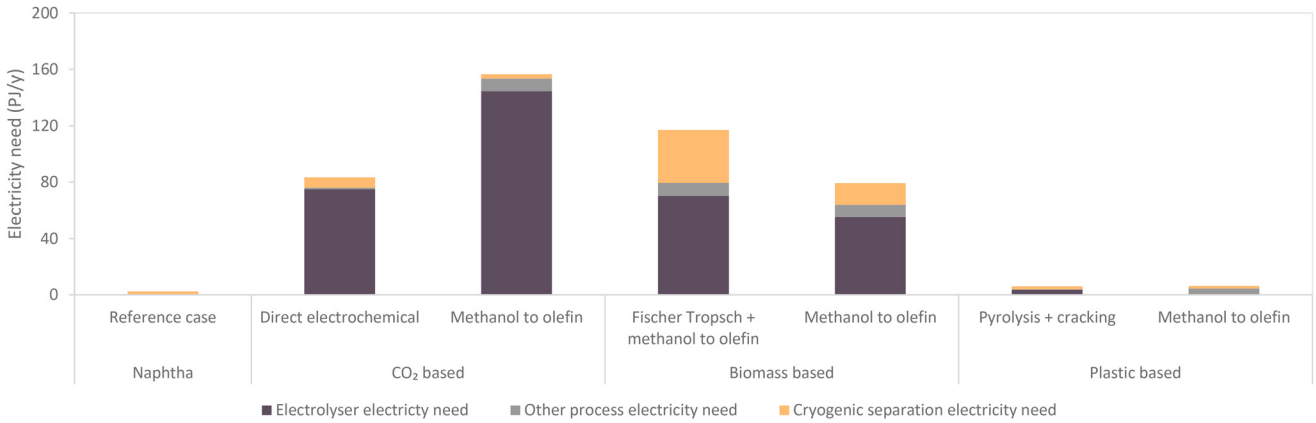

Fig. 5 Electricity needs of different ACS-based processes for 300 kt per year ethylene production.

The results from the economic analysis show that with exception of plastic pyrolysis, all other ACS-based processes are not competitive under current market conditions (as seen in Table 8). The CO_2 based route shows the highest MSP, followed by biomass and plastic. In fact, plastic pyrolysis shows a similar price to the reference case (1075 EUR per t) due to higher CUE and lower CAPEX. A key reason for the higher MSP of ethylene in most ACS processes is that they tend to be more CAPEX and OPEX intensive than the reference route. In absolute terms, the CAPEX investment can be as high as 45 times (CO_2 based methanol to olefin route) higher than a conventional naphtha cracker. In all the CAPEX intensive ACS-based routes, hydrogen production accounts for a major share of the costs (as seen in ESI Fig. S25–S38†). For example, in the CO_2 based direct electrochemical process, the electrolyzer alone accounts for 54% and in the methanol to olefin-based process the water electrolyser accounts for ~30% of the total CAPEX.

The OPEX intensity of the ACS-based routes is due to feedstock price and or utility costs (as seen in ESI Fig. S25–S38†). In the reference case, raw material cost accounts for about 84% of the OPEX, while utilities account for only 12% of the OPEX. For the CO_2-based process, the cost of raw material becomes comparatively minor (5% of the OPEX), while utilities account for 53% to 63% of the total OPEX. For the biomass-based process, both raw material and utilities show a similar contribution (31%–40% and 36%–47%, respectively). Finally, for the plastic waste-based routes, raw material cost accounts for 90% and 64% of the OPEX for pyrolysis and plastic based methanol to olefin processes, respectively. The results indicate that the processes which are utility dominant (like CO_2 and biomass-based routes) tend to have the highest OPEX intensity compared to those that are feedstock dominant processes (like plastic and fossil-based processes). It is important to note that this can change if feedstock availability is constrained.

It is also important to highlight that for the ACS-based processes, the revenues from by-products are higher than the reference case except for the CO_2 based direct electrochemical route (as given in ESI Table S11†). In the reference case, for instance, while ethylene revenue has the highest contribution 33% to the total revenue; for the plastic based pyrolysis route, ethylene contributed only 9% of the total revenue. For the CO_2 based direct electrochemical process, the exception is due to the limited by-products. For methanol to olefin-based processes due to the higher propylene to ethylene production ratio compared to the reference case, the propylene contribution to revenue increased and became significantly higher than ethylene (~30% in methanol to olefin-based *vs.* 17% in reference case).

In terms of process level CO_2 emissions (scope-1), the CO_2 based direct electrochemical emits the least CO_2 of all routes (95 kt per year) as seen in Fig. 6. Notably, all the other pro-

Table 8 Economic comparison of different ACS-based processes for 300 kt per year ethylene production

	Carbon source						
		CO_2 based		Biomass based		Plastic based	
Economic indicators	Naphtha Reference case	Direct electrochemical	Methanol to olefin	Fischer Tropsch + methanol to olefin	Methanol to olefin	Pyrolysis + cracking	Methanol to olefin
Ethylene MSP (EUR per t)	1075	15 588	7504	4752	5268	1075	2511
CAPEX (million EUR)	390	15 803	17 743	12 766	12 619	1532	2737
OPEX (million EUR per year)	850	3719	5872	5998	5330	3616	2400

 This journal is © The Royal Society of Chemistry 2025

Open Access Article. Published on 14 May 2025. Downloaded on 10/22/2025 9:20:45 AM.
This article is licensed under a Creative Commons Attribution 3.0 Unported Licence.

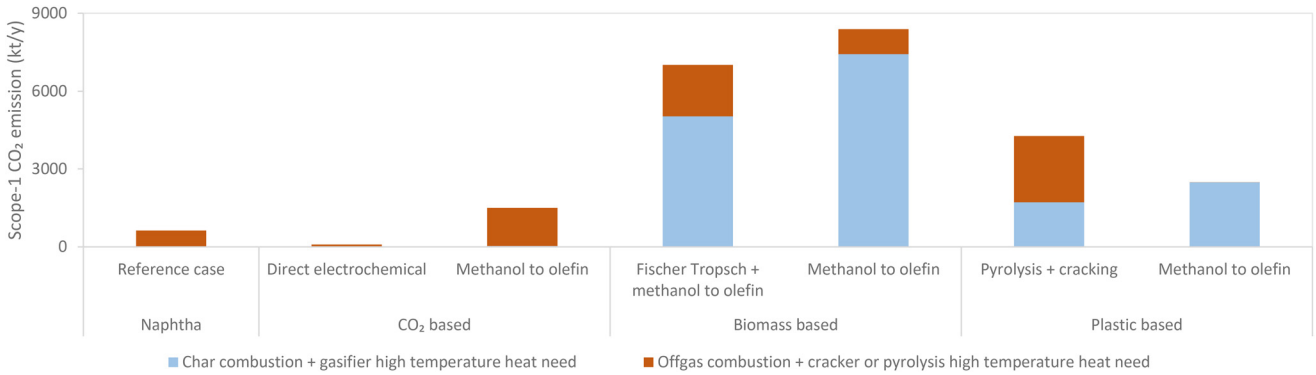

Fig. 6 Scope-1 CO_2 emissions of different ACS-based processes for 300 kt per year ethylene production.

cesses emit more direct CO_2 than the reference case (633 kt CO_2 per year). This higher emission is due to off-gas, char and fuel combustion for high temperature heat or waste to energy recovery in these processes. Thus, for the ACS-based processes, valorisation of off-gas and char to valuable products rather than waste to energy recovery, along with availability of high-temperature renewable heat will be critical for improving their environmental impact. It is important to note that there is a difference in the origin of emissions, while in the reference case, those are of fossil origin, in the ACS routes the emissions have different origins as seen in (Fig. 7). In the case of biogenic emissions, whether they are considered "neutral" will depend on the type and value chain of the biomass. Emissions from waste plastic are so far considered "free" of environmental footprint as they are a waste (following gate-to-gate life cycle analysis guidelines), whether the same principle can be applied to waste to chemical concepts is still under debate. In the case of CO_2, the origin will play a key role in how the emissions are considered as they could originated from fossil processes, biogenic processes or the atmosphere (direct air capture).

In terms of water consumption, in all cases, the ACS-based processes need more process water than the reference case. The biomass-based processes require a larger amount than CO_2-based processes (Fig. 8). This is because in this study, a steam dilution ratio (kg steamper kg biomass) of 0.59 is used

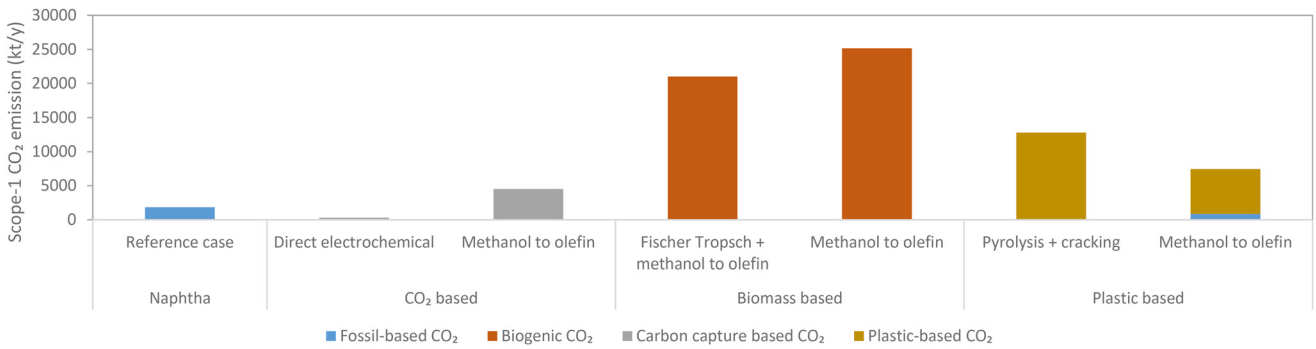

Fig. 7 Scope-1 CO_2 emission of different ACS-based technologies for 900 kt per year ethylene production.

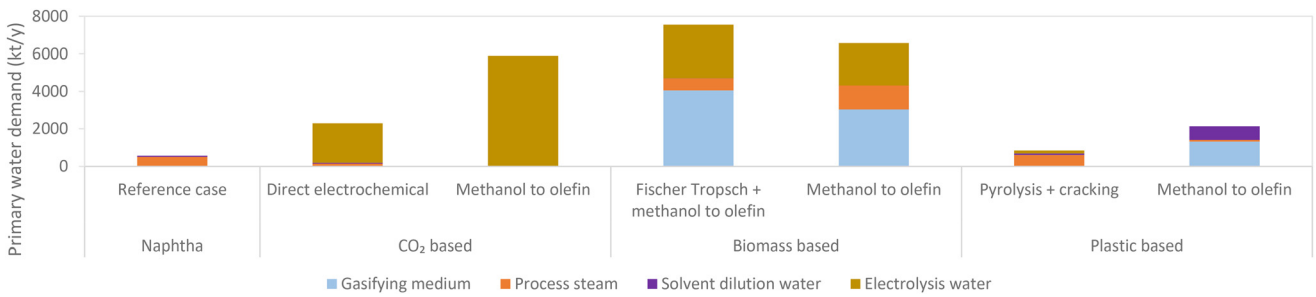

Fig. 8 Primary water demand of different ACS based processes for 300 kt per year ethylene production.

Open Access Article. Published on 14 May 2025. Downloaded on 10/22/2025 9:20:45 AM. This article is licensed under a Creative Commons Attribution 3.0 Unported Licence.

in the simulation based on GoBiGas gasification technology,[47] where 46% to 54% of the process water is needed as gasifying medium. Based on this assumption, biomass steam gasification uses about 13 to 11 times higher process water than a naphtha cracker, while the CO_2 based process needs around 10 to 4 times higher process water. The plastic-based methanol to olefin process has around 3.7 times higher water requirement, while the plastic-based pyrolysis process needs the least quantity of process water (1.5 times).

3.2 Cluster level impacts of defossilising the ethylene production

The results indicated that a notable number of flows within the cluster will be significantly affected due to the introductions of ACS processes (*e.g.*, up to 22 mass flows change by more than 100%). This affects both upstream and downstream units interconnected to the olefin plant. The magnitude of this change varies based on the ACS process used, as seen in Tables 9, 10 and Fig. S39–S44 in the ESI.† Hence, defossilising ethylene production in an existing petrochemical cluster is not just limited to changes in process technology but will have larger consequences in terms of mass flow and infrastructure investments.

Similar to the results at process level, Table 9 shows considerable variations of ACS feedstock needs to produce similar quantities of ethylene, as the carbon utilisation efficiency and ethylene yield of these technologies are different. For example, to produce 1 kg ethylene almost 15 kg CO_2 are needed in the methanol to olefin-based route compared to *ca.* 5 kg CO_2 in the direct electrochemical based process. This significant variation in CO_2 need is due to the material inefficiencies in the CO_2 hydrogenation to methanol and methanol to olefin process (*i.e.*, high recycle purge needs in methanol reactor (10%) and lower ethylene yield in methanol to olefin process (31%)). However, this does not mean all methanol to olefin-based routes will need higher feedstock. In contrast to the results of the CO_2 based routes, to produce 1 kg ethylene; the plastic based methanol to olefin process needs around 6 kg plastic compared to 16 kg plastic in the pyrolysis-based process. This is mainly because, in the plastic based pyrolysis route, the plastic to ethylene yield is 6% compared to 18% in the methanol to olefin-based process, which is due to the high yield of by-products in the pyrolysis process. Therefore, based on the ACS process used, the upstream material infrastructure in the cluster has to be specifically designed.

In addition to these changes, replacing the naphtha cracker for ACS-based ethylene production can also have an unintended effect on imports of other (fossil-based) chemicals in the cluster (as seen in Table 9 and Table S13 ESI†). For instance, the direct electrochemical route does not produce propylene, benzene and C7 + by-products, all of which are important chemical building blocks (CBB) in the cluster. Hence, if these building blocks are not sourced from a sustainable feedstock, it can lead to an increase in fossil feedstock use outside the cluster, to compensate for their lack of production in the cluster, leading to shifting of burden from inside the cluster to outside the cluster. In terms of climate change, it would mean that while the cluster itself could reduce its dependence on fossil feedstocks, the total emissions (estimated as the sum of emissions in and outside the cluster) could increase, thereby taking us farther away of reaching climate targets.

Table 10 shows the changes in mass flow downstream of the olefin plant in the cluster due to ethylene defossilisation. The most affected downstream mass flows in the cluster are wastewater, off-gases, heavy hydrocarbon and oxygen. Except for plastic based pyrolysis, in all other processes, the wastewater production increases from as low as 100% to as high as 1000%. Hence, new wastewater treatment facilities will be required in the cluster. Regarding other utilities, with exception of the waste plastic routes, in all other processes, oxygen production increases between 1000% to 2500%. Therefore,

Table 9 Comparison of inlet mass flow changes at cluster level of different ACS-based ethylene production process

		Carbon source						
			CO_2 based		Biomass based		Plastic based	
Mass flow per unit ethylene (kg kg^{-1})		Naphtha Reference case	Direct electrochemical	Methanol to olefin	Fischer Tropsch + methanol to olefin	Methanol to olefin	Pyrolysis + cracking	Methanol to olefin
In	Naphtha	3.4	0.0	0.0	0.0	0.0	0.0	0.0
	Pygas/ reformate	5.6	4.1	4.3	4.5	4.3	5.4	4.3
	Water	1.7	6.8	18.7	22.9	16.8	2.7	4.2
	CO_2	0.0	4.6	15.3	0.0	0.0	0.0	0.0
	Biomass	0.0	0.0	0.0	22.9	16.4	0.0	0.0
	Plastic	0.0	0.0	0.0	0.0	0.0	16.5	5.9
	Other input	0.4	0.2	0.2	0.3	0.2	0.2	0.2
	Refinery (propylene)	0.1	0.6	0.0	0.0	0.0	0.0	0.0
	Refinery (C4s)	0.4	0.6	0.3	0.1	0.3	0.4	0.3
	Refinery (benzene)	0.0	0.7	0.5	0.3	0.5	0.0	0.5
	Refinery import (C7+)	0.0	0.3	0.3	0.0	0.3	0.0	0.3
	Oxygen	0.7	0.0	0.0	0.0	0.0	0.2	0.6

 This journal is © The Royal Society of Chemistry 2025

Open Access Article. Published on 14 May 2025. Downloaded on 10/22/2025 9:20:45 AM.
This article is licensed under a Creative Commons Attribution 3.0 Unported Licence.

Table 10 Comparison of outlet mass flow changes at cluster level of different ACS-based ethylene routes

		Carbon source						
			CO_2 based		Biomass based		Plastic based	
Mass flow per unit ethylene (kg kg^{-1})		Naphtha Reference case	Direct electrochemical	Methanol to olefin	Fischer Tropsch + methanol to olefin	Methanol to olefin	Pyrolysis + cracking	Methanol to olefin
Out	Ethylene	1.0	1.0	1.0	1.0	1.0	1.0	1.0
	Propylene	0.6	0.0	1.3	1.0	1.3	0.6	1.3
	Refinery (propylene)	0.1	0.6	0.0	0.0	0.0	0.0	0.0
	C4s	0.2	0.0	0.3	0.5	0.3	0.2	0.3
	Refinery (C4s)	0.4	0.6	0.3	0.1	0.3	0.4	0.3
	Benzene	0.8	0.0	0.3	0.5	0.3	0.8	0.3
	Refinery (benzene)	0.0	0.7	0.5	0.3	0.5	0.0	0.5
	Benzene (from aromatics plant)	1.0	0.9	0.9	0.9	0.9	0.9	0.9
	P-xylene	0.8	0.7	0.8	0.8	0.8	0.8	0.8
	O-xylene	0.2	0.2	0.2	0.2	0.2	0.2	0.2
	Other products	0.6	0.0	0.0	1.3	0.0	9.9	0.0
	Other products (from aromatics plant)	3.1	2.8	2.9	3.1	2.9	3.0	2.9
	C7 + excess	0.0	0.0	0.0	0.2	0.0	0.0	0.0
	Wastewater	1.9	4.1	8.7	23.4	16.9	1.9	6.5
	Other waste	0.0	0.0	5.1	9.3	5.4	5.0	0.0
	Ethanol	0.0	0.0	0.0	0.0	0.0	0.0	0.0
	Oxygen	0.7	5.9	16.6	8.4	6.4	0.7	0.6
	Other gases	0.8	0.4	0.7	0.0	1.7	0.0	0.8

further studies need to explore potential avenues to exploit the high quantity of oxygen. In most processes, except for the CO_2 based direct electrochemical and waste plastic-based methanol to olefin, the amount of off-gas and/or heavy hydrocarbons increases in the cluster. This will require additional infrastructure to utilise these hydrocarbon streams for waste to heat recovery, waste to power or as new sources of sustainable feedstock for fuels or chemicals.

The ACS routes significantly affected the energy flows in the cluster. The reference case naphtha cracker has 6 inlet and outlet energy streams, and all these energy streams are affected when the unit is replaced with an ACS-based technology (as seen in Table 11 and Fig. S45–S50 ESI†). These impacts vary from non-use of existing energy infrastructure, to changes in the amount of energy, which can be as large as 650 times in energy flows into the cluster. The most impacted energy streams are cooling water flow, electricity flow and high pressure steam generation flow. The high cooling water flow, for example in the biomass route, is due to the high temperature reactions and distillation-based separation used in these processes. Noted that cooling water requirements could be further decreased by more exhaustive heat integration.

The change in ethylene production from fossil naphtha to ACS-based processes will also have economic impacts (as seen in Tabel S14 ESI†) as changes in price of products or byproducts propagate in a cluster through value-chains. Among the ACS routes, the CO_2 based ethylene is the most expensive followed by biomass-based ethylene and waste plastic-based ethylene showing the lowest price increase.

Table 12 shows the propagation of the change in cost of ethylene in the value chains. For instance, ethylene is used to produce EDC, which in turn is the main raw material for VCM and VCM is then used to produce PVC (as shown in ESI Table S15†). In this route, CO_2 based direct electrochemical process results in an increase in MSP of ethylene of about 1350% which then cascades throughout the chain resulting in an increase on PVC MSP of about 982% (assuming all other products and utilities do not change in price). The impact is highly depending on the importance of ethylene as carbon source in the chain. The CO_2 based direct electrochemical process, for instance, affects only the ethylene-based value chains due to the lack of carbon by-products while the CO_2 based methanol to olefin route affects the ethylene, propylene and partially benzene value-chains. The partial impact in benzene value-chain is due to the insufficient production of benzene in the ACS-based processes with respect to the demand in the cluster. Among the ethylene value-chains, PVC is impacted the most based on the CO_2 process used. This large impact is due to ethylene being the only carbon source for PVC while in other value-chains this is not the case. Among the biomass-based process, the Fischer Tropsch + methanol to olefin route has a slightly higher impact on the PO-SM value-chain than the methanol to olefin-based process as the yield of benzene is slightly higher for Fischer Tropsch + methanol to olefin-based process than the methanol-based process. Compared to CO_2, the price impact of biomass-based process is lower. The plastic-based pyrolysis process shows no price impact on the value-chains, as it could produce naphtha at the market price of fossil-based naphtha (~560 EUR per t). The plastic-based methanol to olefin process creates an increase between 30% to 130% in the value-chains (as shown in Table 12 and ESI Table S15†).

Open Access Article. Published on 14 May 2025. Downloaded on 10/22/2025 9:20:45 AM.
This article is licensed under a Creative Commons Attribution 3.0 Unported Licence.

Table 11 Utility needs at cluster level of different ACS-based ethylene production processes

Utility flow per unit ethylene (MJ kg^{-1})		Carbon source						
			CO_2 based		Biomass based		Plastic based	
		Naphtha Reference case	Direct electrochemical	Methanol to olefin	Fischer Tropsch + methanol to olefin	Methanol to olefin	Pyrolysis + cracking	Methanol to olefin
In	LLPS	0	0	0	2	0	0	0
	LPS	6	0	0	0	0	0	55
	MPS	0	0	0	0	0	0	0
	HPS	0	0	0	0	0	0	0
	HHPS	0	0	0	0	0	0	0
	CW	30	48	147	332	234	42	81
	HT utility	0	0	0	0	0	0	16
	Electricity	8	254	498	389	253	20	20
Out	LLPS	0	0	−1	2	−2	0	0
	LPS	0	−2	−16	−78	−15	−10	55
	MPS	−4	−4	−9	−8	−25	−14	−30
	HPS	−7	0	0	−101	−61	−109	−12
	HHPS	−2	0	0	0	0	−2	0

Negative sign refers to heat production and positive sign refers to cooling, heating or electricity need respectively

Table 12 Minimum selling price (MSP) impact in the value chain of ACS-based processes

Price impact in the value-chain (EUR per t)	Carbon source						
		CO_2 based		Biomass based		Plastic based	
	Naphtha Reference case	Direct electrochemical	Methanol to olefin	Fischer Tropsch + methanol to olefin	Methanol to olefin	Pyrolysis + cracking	Methanol to olefin
Polyvinyl chloride (PVC)	740	8009 (+982%)	3959 (+435%)	2581 (+249%)	2840 (+284%)	740 (No price change)	1459 (+97%)
Polyethylene terephthalate (PET)	1284	5691 (+343%)	3236 (+152%)	2401 (+87%)	2557 (+99%)	1284 (No price change)	1720 (+34%)
Styrene monomer (SM)	1328	4439 (+234%)	5293 (+299%)	4006 (+202%)	3913 (+195%)	1328 (No price change)	2214 (+67%)
Propylene oxide (PO)	1450	4847 (+234%)	5780 (+299%)	4375 (+202%)	4275 (+195%)	1450 (No price change)	2417 (+67%)
Propylene glycol methyl ether (PGME)	800	No propylene production	1666 (+108%)	1295 (+62%)	1364 (+70%)	800 (No price change)	994 (+24%)
Acetone	856	No propylene production	5888 (+588%)	3734 (+336%)	4137 (+383%)	856 (No price change)	1980 (+131%)

In brackets the percentage change in price with respect to the reference case is shown

Regarding CO_2 emissions, the indirect (scope-2) emission analysis of the ACS-based processes shows that, as these processes are highly energy intense, scope-2 emissions will be substantially high if existing (fossil) based energy mix is used (as seen in Fig. 9). The major share of scope-2 CO_2 emissions is due to the electricity carbon footprint used and if renewable electricity is used, scope-2 emissions are considerably lowered. Replacing fossil-based feedstocks with ACS-based feedstocks requires therefore not only changing technology at plant level, but also major changes in utility infrastructure for the ACS-based processes to be environmentally appealing. It is important to note that this is not the case for waste plastic-based processes as these routes do not need external hydrogen production due to the better C/H ratio found in plastic feedstock.

The analysis of the impact on water demand of the cluster due to the ACS-based processes shows that secondary water demand by the cluster also increases, similar to what is observed for primary water demand at process level discussed in the previous section. The highest demand is observed for biomass-based processes in terms of cooling water due to their low-temperature cooling demand (cooling demand between 40 °C and 140 °C). Substantial cooling water and boiler feedwater demand is observed for all ACS-based processes compared to the reference case (as seen in Fig. 10). Hence major infrastructural change in terms of cooling water and boiler feed water will be required to accommodate the new ACS-based processes.

3.3 Sensitivity analysis

The OPEX and CAPEX analysis of the ACS-based processes, shows that the major factors contributing towards the OPEX and CAPEX of these processes are: electrolyser cost, utility cost

Open Access Article. Published on 14 May 2025. Downloaded on 10/22/2025 9:20:45 AM.
This article is licensed under a Creative Commons Attribution 3.0 Unported Licence.

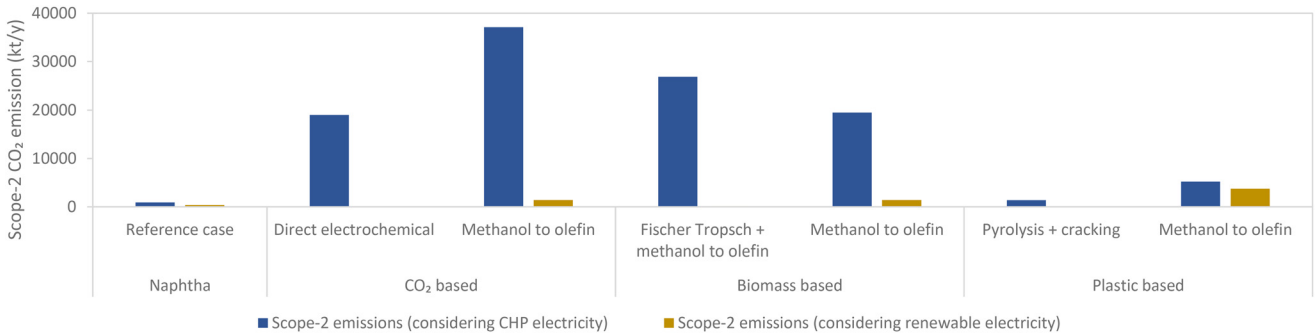

Fig. 9 Scope-2 CO_2 emission of different ACS-based technologies for 900 kt per year ethylene production.

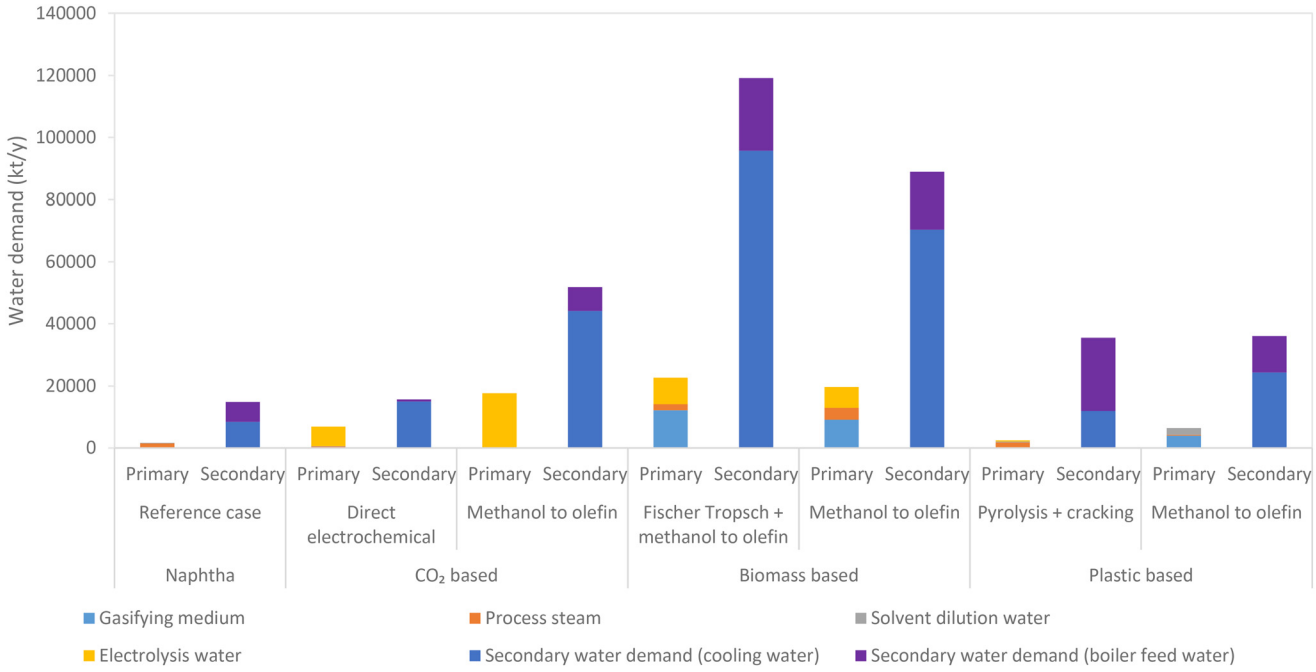

Fig. 10 Primary and secondary water demand of different ACS-based technologies for 900 kt per year ethylene production.

and raw material cost (as explained in section 3.1 and seen in ESI Fig. S25–S38†). Based on this analysis, a sensitivity analysis is conducted for the following parameters: feedstock price, solvent price, operating voltage, electrolyzer cost, electrolyzer life, electricity price and ROI (as given in Table 4).

The sensitivity analysis for CO_2 based direct electrochemical process shows that the technology is highly sensitive to electrolyser cost, electrolyser life and electricity price (Fig. 11(a)). For the CO_2 based direct electrochemical process (as observed in Fig. S52 ESI†), in the worst-case scenario, the ethylene MSP can be as high as 23 650 EUR per t. And in the best-case scenario, the ethylene MSP can be as low as 1204 EUR per t. The CO_2 based methanol to olefin process is also most sensitive to electricity price (as seen in Fig. 11(b)) and shows an ethylene MSP between 1436 EUR per t to 10 769 EUR per t in the respective best- and worst-case scenarios (as seen in ESI Fig. S53†).

In the case of biomass-based Fischer Tropsch + methanol to olefin process, it is observed as seen in Fig. 11(c), that the process is most sensitive not only to electricity price but also to biomass feedstock price. For the best-case scenario, the ethylene MSP is as low as 667 EUR per t and for the worst-case scenario, the ethylene MSP is 7041 EUR per t for the biomass-based Fischer Tropsch + methanol to olefin process (as shown in ESI Fig. S54†). In the case of biomass the methanol to olefin route, Fig. 11(d), the process is most sensitive to electricity price, syngas cleaning solvent price and biomass feedstock price. The analysis shows that the biomass-based methanol to olefin process does not have high variability for ethylene MSP (*i.e.*, 1586 EUR per t to 8675 EUR per t in ESI Fig. S55†), as seen in CO_2 based processes.

For plastic based pyrolysis process (Fig. 11(e)), the process is highly sensitive to the waste plastic price. The sensitivity analysis (Fig. S56 and S57 in ESI†) shows that the plastic

Open Access Article. Published on 14 May 2025. Downloaded on 10/22/2025 9:20:45 AM.
This article is licensed under a Creative Commons Attribution 3.0 Unported Licence.

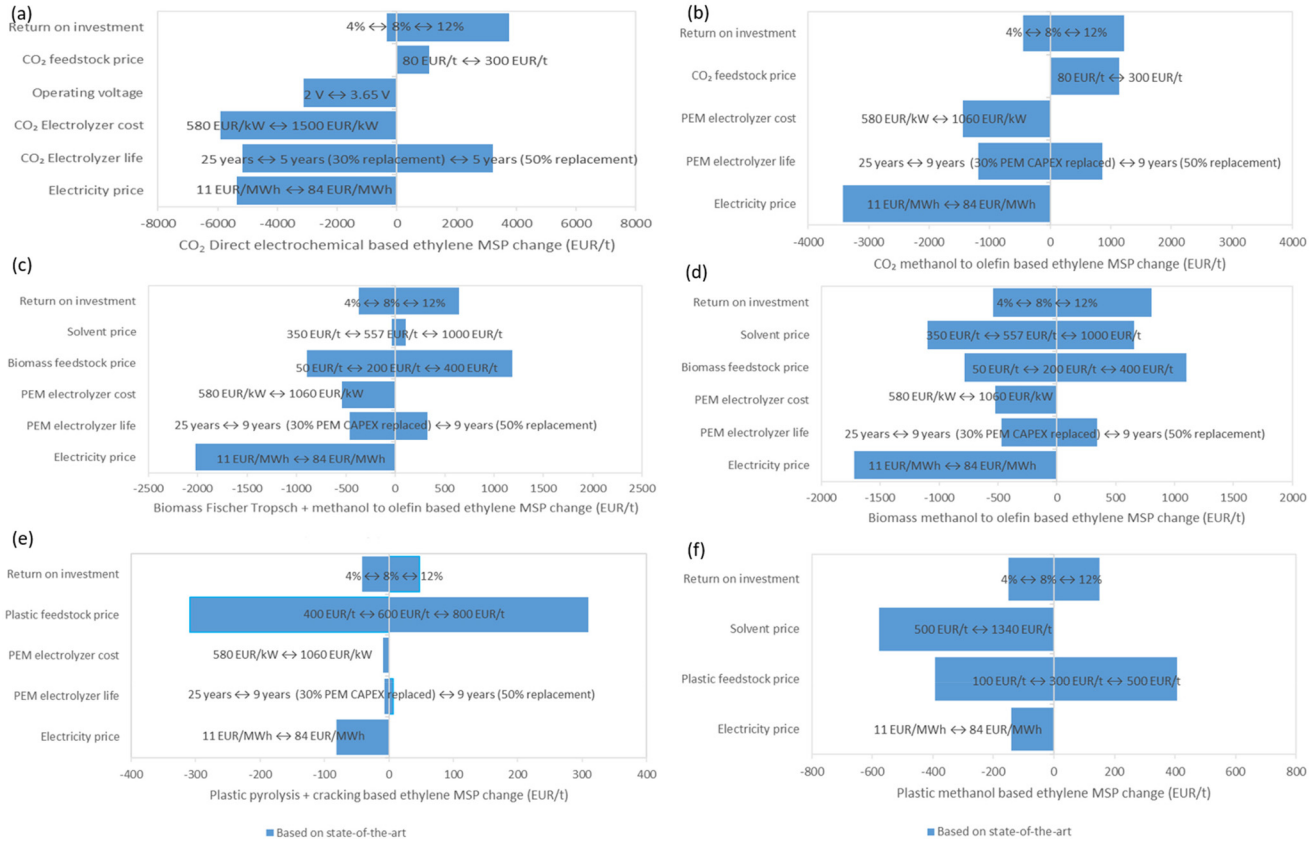

Fig. 11 (a) Sensitivity analysis of CO_2 direct electrochemical based ethylene MSP, (b) sensitivity analysis of CO_2 methanol based ethylene MSP, (c) sensitivity analysis of biomass Fischer Tropsch + methanol based ethylene MSP, (d) sensitivity analysis of biomass methanol based ethylene MSP, (e) sensitivity analysis of plastic pyrolysis + cracking based ethylene MSP, (f) sensitivity analysis of plastic methanol based ethylene MSP.

based pyrolysis process has the least variation of 632 EUR per t to 1445 EURper t, compared to the other technologies and potentially could have an MSP comparable to that of the current ethylene MSP (1075 EUR per t). In the case of plastic based methanol to olefin process, Fig. 11(f), the process is most sensitive to the syngas cleaning solvent price and plastic feedstock price. The analysis shows that the plastic based methanol to olefin process has an MSP variation between 1263 EUR per t to 3080 EUR per t (as shown in Fig. S58 in ESI†).

4. Conclusion

Defossilising the production of high-volume petrochemicals like ethylene will be vital to reducing the carbon footprint of our society and meet the ambitious CO_2 emissions targets needed to mitigate climate change. However, changing feedstock in a highly interconnected existing cluster can have unintended cascading effects on upstream supply-chains, downstream units and energy islands. The results indicate that in the case of ethylene, it won't be a plug-and-play situation, as the ACS-based processes have highly different product distribution, energy needs and waste generation. The process that has the most similar product distribution and the least impact in the existing petrochemical cluster is the waste plastic pyrolysis process. A significant challenge for other ACS-based technologies is the sizeable amount of renewable electricity at cheap price that will be needed for the hydrogen production required in the routes. The results at cluster level show that for the existing cluster it will not be easy to replace the naphtha cracker with ACS-based technologies due to limitation in area and additional requirements (like electricity supply, water supply); as the ACS-based processes need around 5 to 10 times higher area, electricity or water.

The paper also highlights the importance of studying ACS technologies in the context of multiple products in highly symbiotic industrial clusters, as defossilising ethylene can create shifting of burden to outside the cluster and may result in a net increase of the fossil fuel consumption. The unintended major environmental consequences of defossilising ethylene production were the large water consumption and CO_2 emissions (scope-1 and scope-2), which could nullify the purpose of defossilisation chemical building blocks. The CO_2 emissions analysis shows that ACS-based technologies should be deployed in tandem with renewable energy-based utilities for the system to be low-carbon. Future studies should look into the potential of recycling wastewater, valorising waste and inte-

 This journal is © The Royal Society of Chemistry 2025

Open Access Article. Published on 14 May 2025. Downloaded on 10/22/2025 9:20:45 AM.
This article is licensed under a Creative Commons Attribution 3.0 Unported Licence.

gration of renewable energy for heating needs in ACS-based processes to make it more environmentally appealing. However, to achieve cost competitiveness with existing fossil-based counterparts at current conditions, availability of low-priced renewable energy, feedstocks as well as efficient and durable electrolysers are critical.

Abbreviations

Nomenclature

ACS	Alternative carbon source
BFW	Boiler feed water
BTX	Benzene, toluene and xylene
CAPEX	Capital expenditure
CBB	Chemical building blocks
CHP	Combined heat and power
CKI	Chloor kringloop installatie (or chlorine incineration)
CUE	Carbon utilisation efficiency
CW	Cooling water
DEG	Diethylene glycol
EB	Ethylbenzene
EDC	Ethylene dichloride
EDTA	Ethylenediamine tetra-acetic acid
EG	Ethylene glycol
EO	Ethylene oxide
HHPS	High-high pressure steam
HPS	High pressure steam
HT	High temperature
IPA	Isopropyl alcohol
KPI	Key performance indicator
LLPS	Low-low pressure steam
LPS	Low pressure steam
MDI	Methylene diphenyl diisocyanate
MEG	Monoethylene glycol
MPS	Medium pressure steam
MSP	Minimum selling price
MTBE	Methyl *tert*-butyl ether
OPEX	Operational expenditure
PEM	Proton exchange membrane
PET	Polyethylene terephthalate
PFD	Process flow diagram
PGME	Propylene glycol methyl ether
PO	Propylene oxide
PoR	Port of Rotterdam
PTA	Purified terephthalic acid
PVC	Polyvinyl chloride
RME	Rapeseed methyl ester
ROI	Return on investment
SM	Styrene monomer
TBA	Tert-butyl alcohol
TEG	Triethylene glycol
TEEG	Tetra-ethylene glycol
TRL	Technology readiness level
VCM	Vinyl chloride monomer
VGO	Vacuum gas oil

Symbols

EUR per t	Euro per tonne
EUR per year	Euro per year
GW	Gigawatt
kt per year	Kilotonne per year
kW	Kilowatt
MJ kg^{-1}	Megajoule per kilogram
Mt	Million tonnes
MWh	Megawatt-hour
PJ per year	Petajoule
TJ per year	Tera Joule per year
TW h	Terawatt-hour
V	Volt
wt%	Weight percentage

Author contributions

J. T. M, M. P.-F. and A. R. R. conceptualised the paper. M. P.-F and A. R. R. supervised the project. J. T. M. wrote the original draft. M. P.-F and A. R. R. reviewed and edited the manuscript. All authors discussed the results and commented on the manuscript.

Data availability

The data supporting this article have been included as part of the ESI† and Appendix A.

Conflicts of interest

There are no conflicts to declare.

Appendix A

The dataset of the process models which contains the detailed assumptions, mass balance, energy balance, economics and sources that was used in the analysis for the manuscript is provided below:

- Naphtha steam cracker: **https://doi.org/10.5281/zenodo.14825234**.
- CO_2–H_2O direct electrochemical reduction to ethylene: **https://doi.org/10.5281/zenodo.14894342**.
- CO_2 hydrogenation to methanol followed by methanol to olefin conversion: **https://doi.org/10.5281/zenodo.14894523**.
- Biomass steam gasification followed by methanol to olefin: **https://doi.org/10.5281/zenodo.14894523**.
- Biomass steam gasification followed by Fischer Tropsch and methanol to olefin: **https://doi.org/10.5281/zenodo.14893888**.
- Plastic pyrolysis followed by naphtha steam cracking: **https://doi.org/10.5281/zenodo.14894590**.
- Plastic steam gasification followed by methanol to olefin: **https://doi.org/10.5281/zenodo.14894523**.

Open Access Article. Published on 14 May 2025. Downloaded on 10/22/2025 9:20:45 AM.
This article is licensed under a Creative Commons Attribution 3.0 Unported Licence.

Acknowledgements

This publication is part of the project Unravelling the impacts of using alternative raw materials in industrial clusters (with project number VI.C.183.010) of the research programme Vici DO which is financed by the Dutch Research Council (NWO). We also thank Michael Tan, Inna Stepchuk for sharing the reference case and Sebastian Quevedo for sharing the plastic to methanol Aspen Plus models which were used for the assessment in this study.

References

1 Renewable Carbon Initiative, *Glossary*. **https://renewable-carbon-initiative.com/renewable-carbon/glossary/**, (accessed 2025-02-12).

2 Ministry of economic affairs & climate policy (NL), Ministry of infrastructure & water management (NL). *The Importance of Sustainable Carbon: Strong Policies Needed to Promote the Uptake of Sustainable Carbon for a Climate-Neutral and Circular Chemical Sector*, 2020. **https://www.rijksoverheid.nl/documenten/rapporten/2023/09/19/bijlage-3-non-paper-importance-sustainable-carbon**.

3 European Commission, *Towards an Ambitious Industrial Carbon Management for the EU*, 2024. **https://energy.ec.Europa.eu/document/download/6b89e732-fea4-480b-9d2e-cf64de90247e_en?filename=Communication_-_Industrial_Carbon_Management.pdf**.

4 F. Kähler and M. Carus, *CO2 Reduction Potential of the Chemical Industry through CCU*; 2022. **https://www.renewable-carbon-initiative.com**.

5 A. M. Bazzanella and F. Ausfelder, *Low Carbon Energy and Feedstock for the European Chemical Industry*; 2017. **https://dechema.de/dechema_media/Downloads/Positionspapiere/Technology_study_Low_carbon_energy_and_feedstock_for_the_European_chemical_industry.pdf**.

6 OECD, *The Future of Petrochemicals*, 2018. DOI: **10.1787/9789264307414-en**.

7 F. Kähler, M. Carus, O. Porc and C. vom Berg, Turning off the Tap for Fossil Carbon: Future Prospects for a Global Chemical and Derived Material Sector Based on Renewable Carbon, *Ind. Biotechnol.*, 2021, **17**(5), 245–258, DOI: **10.1089/ind.2021.29261.fka**.

8 The Royal Society, *Catalysing Change: Defossilising the Chemical Industry*; 2024. **https://royalsociety.org/-/media/policy/projects/defossilising-chemicals/defossilising-chemical-industry-report.pdf**.

9 Center for Global Commons, Systemiq. *Planet Positive Chemicals*; 2022. **https://www.systemiq.earth/wp-content/uploads/2022/09/Main-report-v1.20-2.pdf**.

10 E. T. C. Vogt and B. M. Weckhuysen, The Refinery of the Future, *Nature*, 2024, **629**(8011), 295–306, DOI: **10.1038/s41586-024-07322-2**.

11 M. Stork, J. de Beer, N. Lintmeijer and B. den Ouden, in *Chemistry for Climate: Acting on the Need for Speed. Roadmap for the Dutch Chemical Industry towards 2050*, 2018. **https://task42.ieabioenergy.com/wp-content/uploads/sites/10/2018/10/VNCI_Routekaart-2050.pdf**.

12 J. van Schijndel, R. de Mare, N. Thijssen and J. van der Valk Bouman, TDES:Transformation of the Dutch Energy System, in *Proceedings of the 34th European Symposium on Computer Aided Process Engineering/15th International Symposium on Process Systems Engineering (ESCAPE34/PSE24)*, ed. F. Manenti and G. V. Reklaitis, Florence, Italy, 2024, pp. 2029–2034. DOI: **10.1016/B978-0-443-28824-1.50339-2**.

13 S. Samadi, C. Schneider and S. Lechtenböhmer, Deep Decarbonisation Pathways for the Industrial Cluster of the Port of Rotterdam, in *Eceee Industrial Summer Study Proceedings*, 2018, vol. 2018, pp. 399–409.

14 H. Falcke, S. Holbrook, I. Clenahan, A. L. Carretero, T. Sanalan, T. Brinkmann, J. Roth, B. Zerger, S. Roudier and L. D. Sancho, in *Best Available Techniques (BAT) Reference Document for the Production of Large Volume Organic Chemicals*, 2017. **https://tinyurl.com/m6me4rfs**.

15 S. D. Manuel, T. Floris, W. Kira, S. Jos and F. André, High Technical and Temporal Resolution Integrated Energy System Modelling of Industrial Decarbonisation, *Adv. Appl. Energy*, 2022, **7**, 100105, DOI: **10.1016/j.adapen.2022.100105**.

16 F. Kullmann, J. Linßen and D. Stolten, The Role of Hydrogen for the Defossilization of the German Chemical Industry, *Int. J. Hydrogen Energy*, 2023, **48**(99), 38936–38952, DOI: **10.1016/j.ijhydene.2023.04.191**.

17 G. Lopez, D. Keiner, M. Fasihi, T. Koiranen and C. Breyer, From Fossil to Green Chemicals: Sustainable Pathways and New Carbon Feedstocks for the Global Chemical Industry, *Energy Environ. Sci.*, 2023, **16**(7), 2879–2909, DOI: **10.1039/D3EE00478C**.

18 P. Gabrielli, L. Rosa, M. Gazzani, R. Meys, A. Bardow, M. Mazzotti and G. Sansavini, Net-Zero Emissions Chemical Industry in a World of Limited Resources, *One Earth*, 2023, **6**(6), 682–704, DOI: **10.1016/j.oneear.2023.05.006**.

19 X. Rixhon, M. Colla, D. Tonelli, K. Verleysen, G. Limpens, H. Jeanmart and F. Contino, Comprehensive Integration of the Non-Energy Demand within a Whole-Energy System: Towards a Defossilisation of the Chemical Industry in Belgium, in 34th International Conference on Efficiency, Cost, Optimization, Simulation and Environmental Impact of Energy Systems (ECOS 2021), ECOS 2021 Program Organizers, Tokyo, Japan, 2022, pp. 152–163. DOI: **10.52202/062738-0014**.

20 D. Saygin and D. Gielen, Zero-Emission Pathway for the Global Chemical and Petrochemical Sector, *Energies*, 2021, **14**(13), 3772, DOI: **10.3390/en14133772**.

21 B. Erkmen, A. Ozdogan, A. Ezdesir and G. Celik, Can Pyrolysis Oil Be Used as a Feedstock to Close the Gap in the Circular Economy of Polyolefins?, *Polymers*, 2023, **15**(4), 859, DOI: **10.3390/polym15040859**.

22 H. Zimmermann and R. Walzl, Ethylene, in *Ullmann's Encyclopedia of Industrial Chemistry*, Wiley-VCH Verlag GmbH & Co. KGaA, Weinheim, Germany, 2009. DOI: **10.1002/14356007.a10_045.pub3**.

 This journal is © The Royal Society of Chemistry 2025

Open Access Article. Published on 14 May 2025. Downloaded on 10/22/2025 9:20:45 AM.
This article is licensed under a Creative Commons Attribution 3.0 Unported Licence.

23 M. Tan, P. Ibarra-González, I. Nikolic and A. Ramírez Ramírez, Understanding the Level of Integration in Existing Chemical Clusters: Case Study in the Port of Rotterdam, *Circ. Econ. Sustainability*, 2025, **5**(1), 125–146, DOI: 10.1007/s43615-024-00410-5.

24 G. Towler and R. Sinnott, *Chemical Engineering Design*, Elsevier, 2nd ed., 2022. DOI: 10.1016/C2019-0-02025-0.

25 G. Al-Sharrah, A. Elkamel and A. Almanssoor, Sustainability Indicators for Decision-Making and Optimisation in the Process Industry: The Case of the Petrochemical Industry, *Chem. Eng. Sci.*, 2010, **65**(4), 1452–1461, DOI: 10.1016/j.ces.2009.10.015.

26 S. Bungener, R. Hackl, G. Van Eetvelde, S. Harvey and F. Marechal, Multi-Period Analysis of Heat Integration Measures in Industrial Clusters, *Energy*, 2015, **93**, 220–234, DOI: 10.1016/j.energy.2015.09.023.

27 E. Cuppen, I. Nikolic, J. Kwakkel and J. Quist, Participatory Multi-Modelling as the Creation of a Boundary Object Ecology: The Case of Future Energy Infrastructures in the Rotterdam Port Industrial Cluster, *Sustainability Sci.*, 2021, **16**(3), 901–918, DOI: 10.1007/s11625-020-00873-z.

28 G. P. J. Dijkema, E. M. Steenkamp and P. J. T. Verheijen, Implementation of Novel Processes in Existing Process Networks: Evaluation of the Industrial Production of C4 Chemicals by Optimization, *Comput. Chem. Eng.*, 1997, **21**, S493–S498, DOI: 10.1016/S0098-1354(97)87550-3.

29 R. Hackl and S. Harvey, *Opportunities for Process Integrated Biorefinery Concepts in the Chemical Cluster in Stenungsund*, Chalmers University of Technology, 2010. https://research.chalmers.se/en/publication/131485.

30 P. M. Herder and R. M. Stikkelman, Methanol-Based Industrial Cluster Design: A Study of Design Options and the Design Process, *Ind. Eng. Chem. Res.*, 2004, **43**(14), 3879–3885, DOI: 10.1021/ie030655j.

31 K. M. Holmgren, E. Andersson, T. Berntsson and T. Rydberg, Gasification-Based Methanol Production from Biomass in Industrial Clusters: Characterisation of Energy Balances and Greenhouse Gas Emissions, *Energy*, 2014, **69**, 622–637, DOI: 10.1016/j.energy.2014.03.058.

32 M. Pan, J. Sikorski, J. Akroyd, S. Mosbach, R. Lau and M. Kraft, Design Technologies for Eco-Industrial Parks: From Unit Operations to Processes, Plants and Industrial Networks, *Appl. Energy*, 2016, **175**, 305–323, DOI: 10.1016/j.apenergy.2016.05.019.

33 T. Ren, M. Patel and K. Blok, Steam Cracking and Methane to Olefins: Energy Use, CO2 Emissions and Production Costs, *Energy*, 2008, **33**(5), 817–833, DOI: 10.1016/j.energy.2008.01.002.

34 T. Ren and M. K. Patel, Basic Petrochemicals from Natural Gas, Coal and Biomass: Energy Use and CO2 Emissions, *Resour., Conserv. Recycl.*, 2009, **53**(9), 513–528, DOI: 10.1016/j.resconrec.2009.04.005.

35 C. Schneider, S. Lechtenböhmer and S. Samadi, Risks and Opportunities Associated with Decarbonising Rotterdam's Industrial Cluster, *Environ. Innov. Soc. Trans.*, 2020, **35**, 414–428, DOI: 10.1016/j.eist.2019.05.004.

36 T. Wurth, I. Nikolic, J. Kwakkel, M. Sloot, E. Cuppen and J. Quist, in *Eindrapportage Project Windmaster De Weg Naar Een Adaptief Investeringsbeleid*, 2019. DOI: 10.4233/uuid:122661d9-65eb-4d3a-b91a-2721dcacaaba.

37 L. Wong and T. Van Dril, *Decarbonisation Options for Large Volume Organic Chemicals Production*, Shell Moerdijk, 2020. https://www.pbl.nl/en.

38 J. T. Manalal, M. Pérez-Fortes, P. I. Gonzalez and A. R. Ramirez, Evaluation of Alternative Carbon Based Ethylene Production in a Petrochemical Cluster: Technology Screening & Value Chain Impact Assessment, in *Computer Aided Chemical Engineering; Elsevier Masson SAS*, 2023, 52, 2453–2458. DOI: 10.1016/B978-0-443-15274-0.50390-5.

39 Intratec Solutions LLC, *Strategic Commodity Market Information*. https://www.intratec.us/, (accessed 2022-11-27).

40 ICIS, *Resource hub*. https://www.icis.com/explore/resources/ (accessed 2023-11-27).

41 *The chemical enginnering plant cost index*. Chemical Engineering Magazine. https://www.chemengonline.com/pci-home (accessed 2024-10-20).

42 A. Achitaev, A. Suvorov, P. Ilyushin, I. Volkova, K. Kan and K. Suslov, Life Extension of AC-DC Converters for Hydrogen Electrolysers Operating as Part of Offshore Wind Turbines, *Int. J. Hydrogen Energy*, 2024, **51**, 137–159, DOI: 10.1016/j.ijhydene.2023.07.283.

43 K. Bareiß, C. de la Rua, M. Möckl and T. Hamacher, Life Cycle Assessment of Hydrogen from Proton Exchange Membrane Water Electrolysis in Future Energy Systems, *Appl. Energy*, 2019, **237**, 862–872, DOI: 10.1016/j.apenergy.2019.01.001.

44 A. Badgett, J. Brauch, A. Thatte, R. Rubin, C. Skangos, X. Wang, R. Ahluwalia, B. Pivovar and M. Ruth, *Updated Manufactured Cost Analysis for Proton Exchange Membrane Water Electrolyzers*, 2023. https://www.nrel.gov/publications.

45 E. G. Hertwich, J. A. de Larderel, A. Arvesen, P. Bayer, J. Bergesen, E. Bouman, T. Gibon, G. Heath, C. Peña, P. Purohit, A. Ramirez and S. Suh, *Green Energy Choices : The Benefits, Risks and Trade-Offs of Low-Carbon Technologies for Electricity Production. Report of the International Resources Panel*, 2016. https://www.resourcepanel.org/reports/green-energy-choices-benefits-risks-and-trade-offs-low-carbon-technologies-electricity.

46 ARI- Application Techhnology. *A Practical Guide to Steam and Condensate Engineering. Technological Concepts for an Efficient and Effective Steam Plant*, 2018. https://bermo.com.br/arquivos/filemanager/downloads/informativos/A-Practical-Guide-to-Steam-and-Condensate-Enginnering_Bermo_Ari-Armaturen.pdf.

47 A. Larsson, M. Kuba, T. Berdugo Vilches, M. Seemann, H. Hofbauer and H. Thunman, Steam Gasification of Biomass – Typical Gas Quality and Operational Strategies Derived from Industrial-Scale Plants, *Fuel Process. Technol.*, 2021, **212**, 106609, DOI: 10.1016/j.fuproc.2020.106609.