Chemical Science

ROYAL SOCIETY OF CHEMISTRY

EDGE ARTICLE

View Article Online
View Journal | View Issue

Open Access Article. Published on 12 June 2023. Downloaded on 11/14/2025 3:39:19 AM.
This article is licensed under a Creative Commons Attribution-NonCommercial 3.0 Unported Licence.

Check for updates

Cite this: *Chem. Sci.*, 2023, **14**, 6986

All publication charges for this article have been paid for by the Royal Society of Chemistry

Rapid and column-chromatography-free peptide chain elongation *via* a one-flow, three-component coupling approach†

Naoto Sugisawa, Akira Ando and Shinichiro Fuse *

Received 13th March 2023
Accepted 4th June 2023

DOI: 10.1039/d3sc01333b

rsc.li/chemical-science

Short peptides are extremely important as drugs and building blocks for the syntheses of longer peptides. Both solid- and liquid-phase peptide syntheses suffer from a large number of synthetic steps, high cost, and/or tedious purification. Here, we developed a rapid, mild, inexpensive, and column-chromatography-free peptide chain elongation *via* a one-flow, three-component coupling (3CC) approach that is the first to use α-amino acid *N*-carboxy anhydrides (α-NCAs) both as electrophiles and nucleophiles. We demonstrated the high-yielding and column-chromatography-free syntheses of 17 tripeptides, as well as a gram-scale synthesis of a tripeptide. The total synthesis of beefy meaty peptide was achieved by repeating the 3CC approach with the addition of only one column chromatographic purification. We also demonstrated a one-flow tripeptide synthesis *via in situ* preparation of α-NCA starting from three readily available protected amino acids. With this study, we achieved dramatic reductions in both time and cost compared with typical solid-phase synthesis.

Introduction

Peptide-based drugs have become increasingly important over the past several decades.[1] Reportedly, *ca.* 80% of peptide drugs on the market are short peptides consisting of less than or equal to 10 amino acids.[2] Longer peptides can be readily prepared by linking these short peptides *via* ligation technologies.[3] Therefore, efficient and scalable preparation of short peptides is extremely important both in academia and industry. Solid-phase peptide synthesis (SPPS) is a compelling option due to its facile purification.[4] Pentelute and co-workers recently demonstrated a sophisticated solid-phase automated rapid-flow peptide/protein chain elongation.[5] However, SPPS usually requires the use of a large amount of materials (*i.e.*, expensive coupling agents, additives, a solid phase, amino acids, and solvents).[6] Thus, production cost becomes high even for the synthesis of short peptides. Liquid-phase peptide synthesis (LPPS) has been frequently used for the production of short peptides because it does not require the use of an excess amount of materials. However, burdensome and costly purifications are usually required for the removal of remained and/or reacted materials from the target peptides after every step.[7] Another problem both in SPPS and LPPS is the requirement of deprotection steps that account for almost half of the total number of synthetic steps. Researchers have long coveted an ideal process that enables fewer synthetic steps, low cost, mild, rapid, and scalable peptide chain elongation for short peptides without tedious purification.

One-pot/one-flow, multi-component coupling approaches are attractive because they skip intermediate purifications, and, thus, these can shorten the time for synthesis and reduce waste. However, as far as we could ascertain, there have been only three reports for peptide syntheses based on such an approach. Sampaio-Dias *et al.* used protection-free amino acid **A** as a scaffold in their one-pot, three-component coupling (3CC) approach (Scheme 1a).[8] It is well known that the nucleophilicity of an amino group is higher than that of a carboxyl group in **A** under basic conditions. Therefore, amine **A** was coupled with activated ester **B**, and the remaining carboxyl group was activated by TBTU for the following coupling with amine **C** to afford tripeptide **D**. Fuller *et al.* used urethane-protected α-amino acid *N*-carboxy anhydride (UNCA) **E** as a scaffold in their one-pot 3CC approach (Scheme 1b).[9] The UNCA **E** has an activated C-terminal moiety and a protected N-terminal moiety; thus, a coupling with amine **C** and removal of the Cbz group by Pd/C and H_2 afforded an amine. Coupling of the amine with **F** afforded the desired tripeptide **D**. Yamamoto *et al.* used silyl-protected cyclic dipeptide **G** as a scaffold in their one-pot, 3CC approach (Scheme 1c).[10] The N-terminus of **G** was selectively deprotected by *n*-Bu_4NF and coupled with an activated ester that was derived from carboxylic acid **H**, EDCI, and HOBt. Then, the C-terminus of the resultant dipeptide was again activated by EDCI and HOBt, which was followed by coupling with amine **C′** to afford the tetrapeptide **I**. All the reported approaches demonstrated oligopeptide synthesis without

Department of Basic Medicinal Sciences, Graduate School of Pharmaceutical Sciences, Nagoya University, Nagoya, 464-8601, Japan. E-mail: fuse@ps.nagoya-u.ac.jp

† Electronic supplementary information (ESI) available. See DOI: https://doi.org/10.1039/d3sc01333b

© 2023 The Author(s). Published by the Royal Society of Chemistry

Open Access Article. Published on 12 June 2023. Downloaded on 11/14/2025 3:39:19 AM.
This article is licensed under a Creative Commons Attribution-NonCommercial 3.0 Unported Licence.

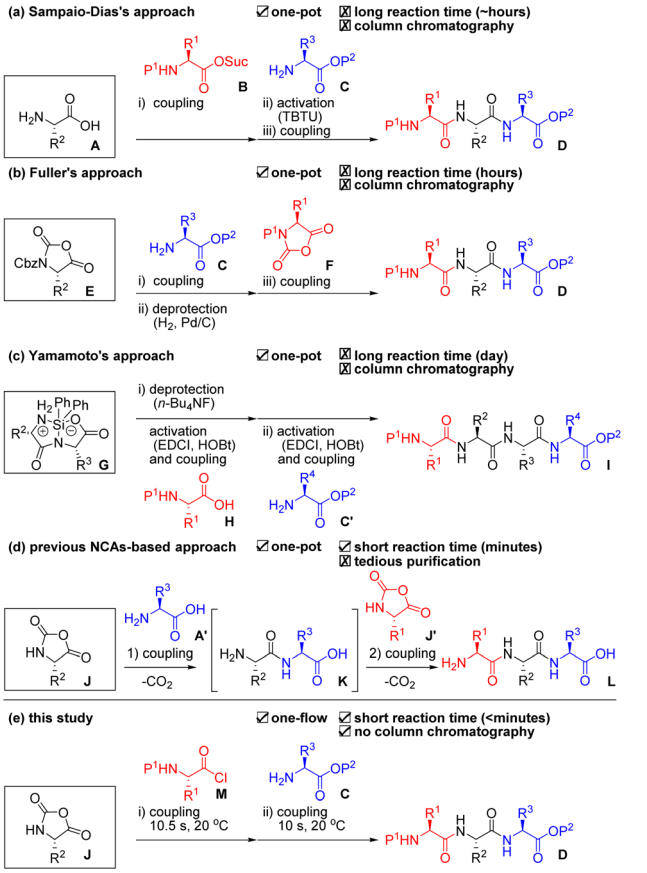

Scheme 1 Previously reported one-pot/one-flow, three-component coupling (3CC) approaches for peptide chain elongation and their problems. (a) Sampaio-Dias's one-pot approach using an unprotected amino acid **A** as a scaffold. (b) Fuller's one-pot approach using an UNCA **E** as a scaffold. (c) Yamamoto's one-pot approach using a silyl protected cyclic dipeptide **G** as a scaffold. (d) Previously reported one-pot approach using α-NCA **J** as an electrophile. (e) Our developed one-flow approach using the **J** both as a nucleophile and an electrophile. P = protecting group; Suc = succinimide; TBTU = 2-(1*H*-benzotriazole-1-yl)-1,1,3,3-tetramethylaminium tetrafluoroborate; Cbz = benzyloxycarbonyl; Ph = phenyl; HOBt = 1-hydroxybenzotriazole; EDCI = 1-(3-dimethylaminopropyl)-3-ethylcarbodiimide hydrochloride.

intermediate purifications. These approaches, however, require activation and/or deprotection steps using expensive reagents and additives as well as tedious column chromatographic purifications. In addition, although one-pot, multi-component Ugi reactions for peptide synthesis have been reported, these afford a diastereomeric mixture of peptides.[11] Hirschmann *et al.* reported a one-pot, protecting group-free synthesis of short peptides (≤6 residues) using α-amino acid *N*-carboxy anhydride (α-NCA) **J** and **J′** under carefully controlled conditions (pH = 10.2, 0–2 °C, high sheer mixing) and achieved an epoch for ribonuclease S synthesis by connecting the short peptides (Scheme 1d).[12] Although α-NCA-based peptide chain elongation is ideal because it requires neither activation nor deprotection steps and emits only CO_2 during the coupling step, but the process has rarely been used due to difficulties in suppressing undesired reactions. In fact, Blacker *et al.* reported the synthesis of di- and tri-peptides using α-NCA **J** in 2017.[13] Although they achieved peptide synthesis using α-NCAs in a continuous stirred tank reactor, they pointed out the difficulties in purifying the obtained peptides due to the generation of undesired products. α-Dehydroamino acid NCAs are much more stable than α-NCAs[14] and have been used for peptide chain elongation *via* a one-pot, 3CC approach because the risk of undesired reactions is low.[15]

Micro-flow technologies allow precise control of both the reaction time on a short scale (<1 s) by rapid mixing (<milliseconds) and reaction temperature.[16] We reported a micro-flow peptide chain elongation using highly electrophilic species,[17] as well as a one-step micro-flow synthesis of NCAs[18] and the derivatizations.[19] Herein, we report an efficient peptide chain elongation based on a one-flow, 3CC approach using α-NCA **J** (Scheme 1e). Although all the previously reported α-NCA-based approaches used α-NCA only as an electrophile (Scheme 1d), our approach is the first to use α-NCA **J** as both a nucleophile and an electrophile. The developed approach for the synthesis of various short peptides enables a reduction in the number of synthetic steps. The process also is mild (20 °C), rapid (<minutes), scalable, high-yielding, and column-chromatography-free.

Results and discussion

To the best of our knowledge, there has been no report of using α-NCA as a nucleophile in peptide bond formation. Therefore, we began by examining acylation of the H–Phe–NCA (**1a**). The initial examinations revealed that the use of acid chloride as an electrophile was suitable for the acylation, whereas the use of acid anhydride did not afford the desired amide product in a satisfactory yield (details are not shown). Thus, readily available pivaloyl chloride was used as a model for amino acid chloride. We connected two T-shaped mixers with Teflon tubing and immersed them in a water bath. A solution of pivaloyl chloride and **1a** in CH_2Cl_2 was injected into the first mixer *via* syringe pump A. A solution of base in CH_2Cl_2 was injected into the first mixer *via* syringe pump B, which resulted in a nucleophilic acyl substitution. A solution of isopropylamine in CH_2Cl_2 was injected into the second mixer *via* syringe pump C to convert to the desired amino acid derivative **2**. The resultant mixture including **2** was collected in test tubes and the results were evaluated *via* HPLC-UV analysis. The bases were examined (Table 1). The use of NMI, NMM, Me_2NBn, Et_3N, and i-Pr_2NEt afforded the desired **2** in low yields (entries 1–5). The sole use of highly basic Et_3N or i-Pr_2NEt generated white precipitates probably due to the undesired oligomerization/polymerization of **1a**. The combined use of pyridine and i-Pr_2NEt afforded **2** in a low yield (entry 6), but the yield was slightly higher than that from the sole use of i-Pr_2NEt (entry 5). To our delight, the combined use of nucleophilic NMI or DMAP and i-Pr_2NEt or Me_2NBn afforded the desired **2** in high yields (entries 7–9). In particular, the combined use of nucleophilic NMI and highly basic i-Pr_2NEt afforded the desired **2** in an excellent yield (entry 7). This is probably because the nucleophilic NMI rapidly activated pivaloyl chloride *via* acyl *N*-methylimidazolium ion

Open Access Article. Published on 12 June 2023. Downloaded on 11/14/2025 3:39:19 AM.
This article is licensed under a Creative Commons Attribution-NonCommercial 3.0 Unported Licence.

Table 1 Examination of bases for the synthesis of amino acid derivative 2

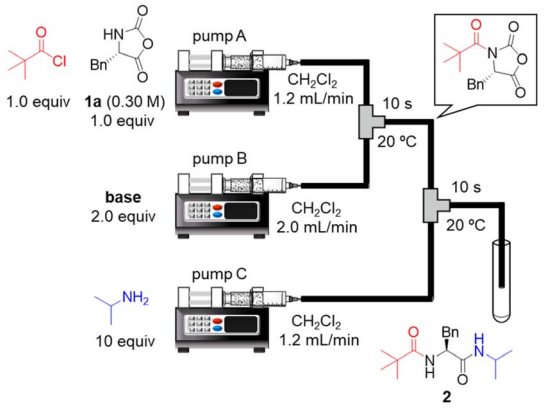

Entry	Base (pK_aH)[a]	Yield[b] (%)
1	NMI (7.0)[20a]	35
2	NMM (7.4)[20b]	2
3	Me_2NBn (8.9)[20b]	<1
4	Et_3N (10.7)[20b]	8
5	i-Pr_2NEt (11.4)[20b]	<1
6[c]	i-Pr_2NEt + pyridine (5.2)[20a]	10
7[c]	i-Pr_2NEt + NMI	>99 (>99)[d]
8[c]	i-Pr_2NEt + DMAP (9.7)[20c]	99
9[c]	Me_2NBn + NMI	89

[a] pK_a of conjugated acid. [b] Yields were determined *via* HPLC-UV analysis. [c] The combined use of bases (1.0 equiv. + 1.0 equiv.). [d] Isolated yield. Bn = benzyl, NMI = *N*-methylimidazole; NMM = *N*-methylmorpholine; Me = methyl; Et = ethyl; i-Pr = isopropyl.

formation and the highly basic i-Pr_2NEt rapidly deprotonate **1a** to enhance its nucleophilicity. We previously reported urethane formation from α-NCAs and alkyl chloroformate, and the combined use of pyridine and tertiary amine afforded the best results.[19b] Interestingly, the optimal combination of bases (NMI and i-Pr_2NEt) for amidation in this study was different from that for urethane formation in the previous study.

Next, we examined a one-flow 3CC for tripeptide synthesis based on the developed conditions (Fig. 1). In order to avoid the isolation of a labile acid chloride, Fmoc-protected amino acid chloride **4a** was *in situ* prepared from Fmoc-protected amino acid **3a** and $SOCl_2$ in the presence of a base (for details of the optimization of bases, solvents and reaction times for acid chloride formation, see ESI Table S2†), which was used for the following coupling with α-NCA **1a**. The coupling generated an intermediate **5a** that was used for the subsequent coupling with amino acid ester **6a** (for details of optimization of bases, amounts of substrate, and reaction times in the coupling between **5a** and **6a**, see ESI Table S3†) that afforded the desired tripeptide **7a**. We successfully obtained the desired **7a** in an 86% yield (30.5 s, 20 °C, 3 steps, Fig. 1). We were amazed that a rather pure peptide could be obtained after a simple aqueous work-up, and a simple recrystallization afforded a highly pure peptide without the need for column chromatographic purification. In addition, gram-scale (3.0 g) preparation of **7a** was

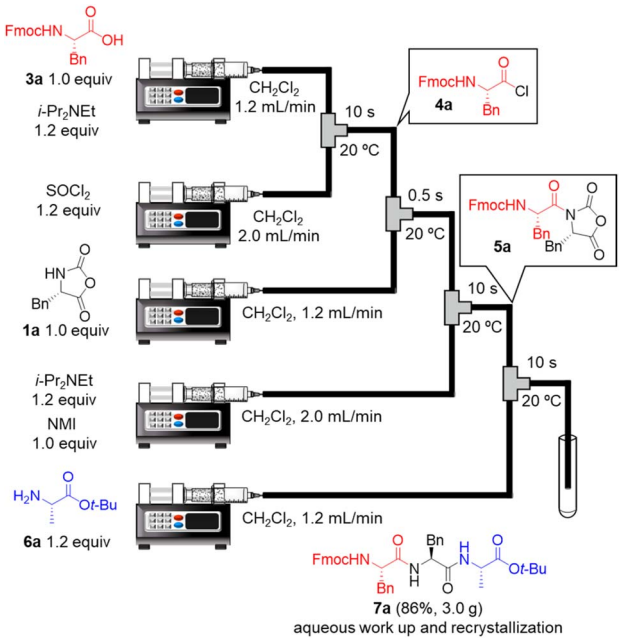

Fig. 1 One-flow, 3CC approach for synthesis of tripeptide. Fmoc = 9-fluorenylmethyloxycarbonyl; *t*-Bu; tertiarybutyl.

successfully achieved by simply extending the pumping time to 14 min 30 s (productivity: 12.3 g h^{-1}). To verify the importance of the micro-flow conditions, batch reactions were examined under the same reaction conditions with the exception of the residence time (0.5 s) of amino acid chloride **4a** and α-NCA **1a** (for details, see ESI Table S4†). Although the reaction mixture was vigorously stirred during the experiments, reproducible results were not observed due to batch-to-batch differences in mixing efficiency. Observed yields under batch conditions were *ca.* 15% lower than those under flow conditions. In particular, this reaction involves the generation of toxic gas such as sulfur dioxide and hydrogen chloride, and, therefore, scale-up of this reaction in a batch reactor should be avoided.

The substrate scope of our developed one-flow, 3CC approach was examined (Fig. 2). The use of Boc-protected amino acid was not suitable for this reaction due to α-NCA formation (for details, see ESI Table S6†),[21] whereas the use of Cbz-protected amino acids afforded the desired tripeptides **7b–g** in high yields (80–95%), although there also was a risk of α-NCA formation.[22] The tripeptides **7h–p** derived from Fmoc-protected amino acids afforded the desired products in high to excellent yields (83–94%). To our delight, the tripeptides **7h** and **7i** derived from sterically hindered Fmoc–Val–OH and Fmoc–Thr(Bn)–OH were obtained in high yields (86% and 87%). The tripeptides **7g** and **7j** derived from racemizable H–Cys(Bn)–NCA and Fmoc–Cys(*t*-Bu)–OH were also obtained in high yields (82% and 83%) without detectable racemization (<0.1%). Notoriously, none of the syntheses required column chromatographic purification, and the pure peptides were readily obtained by simple aqueous work-up with a subsequent recrystallization. A challenging synthesis of tripeptide **7q** containing *N*-methyl amino acid residue was also examined (for

 © 2023 The Author(s). Published by the Royal Society of Chemistry

Open Access Article. Published on 12 June 2023. Downloaded on 11/14/2025 3:39:19 AM.
This article is licensed under a Creative Commons Attribution-NonCommercial 3.0 Unported Licence.

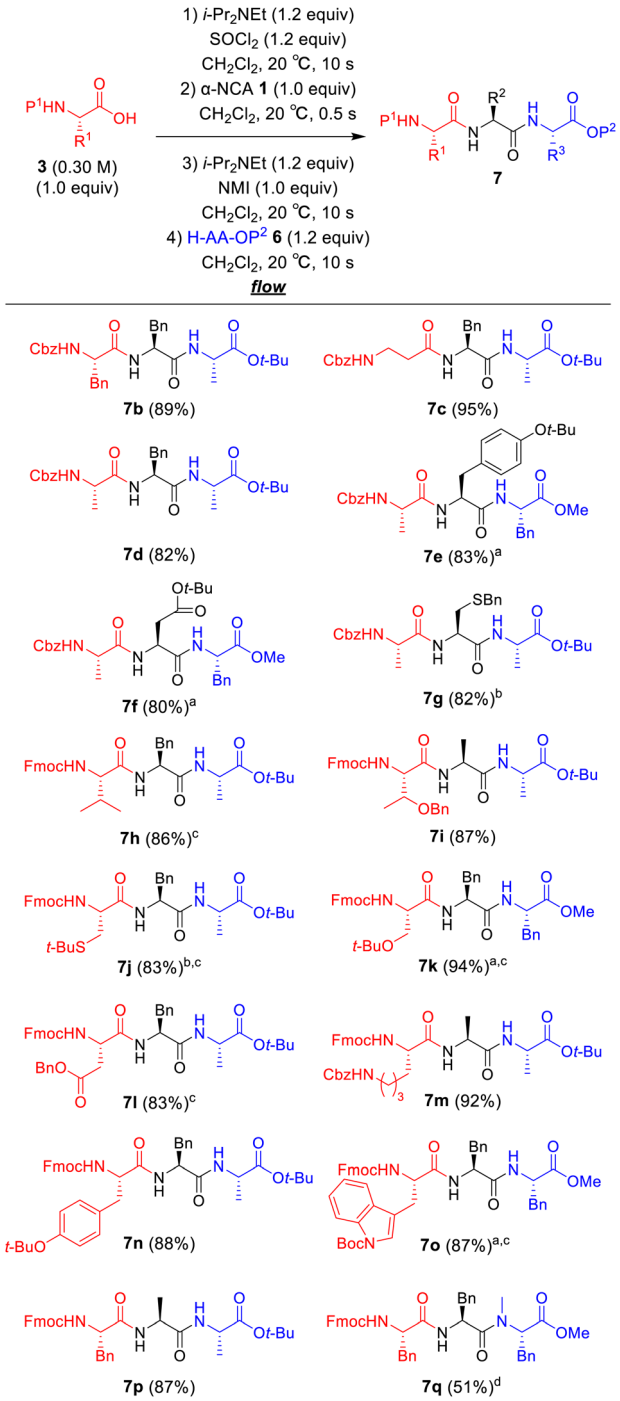

Fig. 2 Substrate scope for the one-flow, 3CC approach. [a]Reaction time for the coupling of *N*-acylated α-NCA **5** with amino acid ester **6** was 10 s (flow) + 1 min (batch). [b]Racemization was not detected by HPLC-UV analysis. [c]Reaction time for the coupling of amino acid chloride **4** with α-NCA **1** was 15 s. [d]Reaction time for the coupling of **5** with H–MePhe–OMe (1.5 equiv.) was 3 h (batch).

details of optimization of the amounts of *N*-methyl amino acid, reaction times, and temperatures for the coupling between **5a** and H–MePhe–OMe, see ESI Table S5†), and **7q** was obtained in an acceptable yield (51%).

We applied our developed approach for synthesis of the octapeptide **10b**, which was shown in Scheme 2, is a beefy meaty peptide (H–Lys–Gly–Asp–Glu–Glu–Ser–Leu–Ala–OH).[23] The preparation of amino acid chlorides from **3b–d** and their couplings with α-NCA **1b–d** was rapid (total 20.5 s). Thus, the process was carried out under micro-flow conditions. On the other hand, the following couplings with **6b**, **7s**, and **8b** required a longer time (1–10 min), and, therefore, these were carried out under batch conditions. The first 3CC of **3b** with **1b** and **6b** afforded crude tripeptide **7r**, and the subsequent simple recrystallization afforded sufficiently pure **7r** in 82% yield (HPLC purity 94%). We compared both the time and the cost of

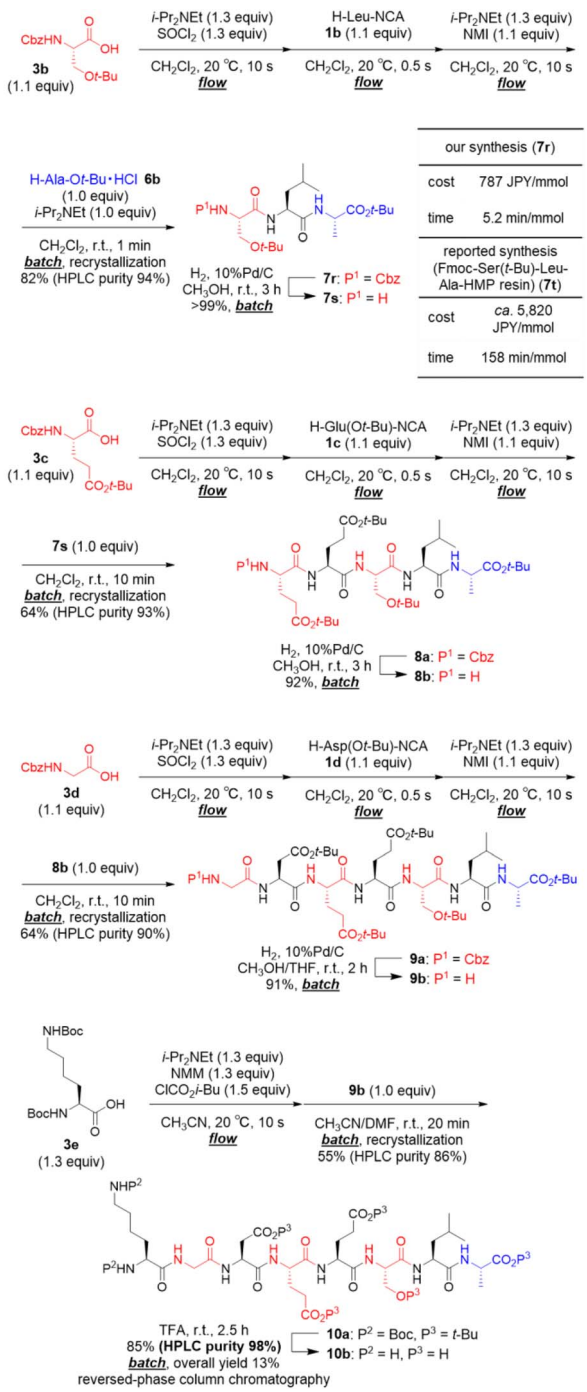

Scheme 2 Total synthesis of beefy meaty peptide (**10b**).

Open Access Article. Published on 12 June 2023. Downloaded on 11/14/2025 3:39:19 AM.
This article is licensed under a Creative Commons Attribution-NonCommercial 3.0 Unported Licence.

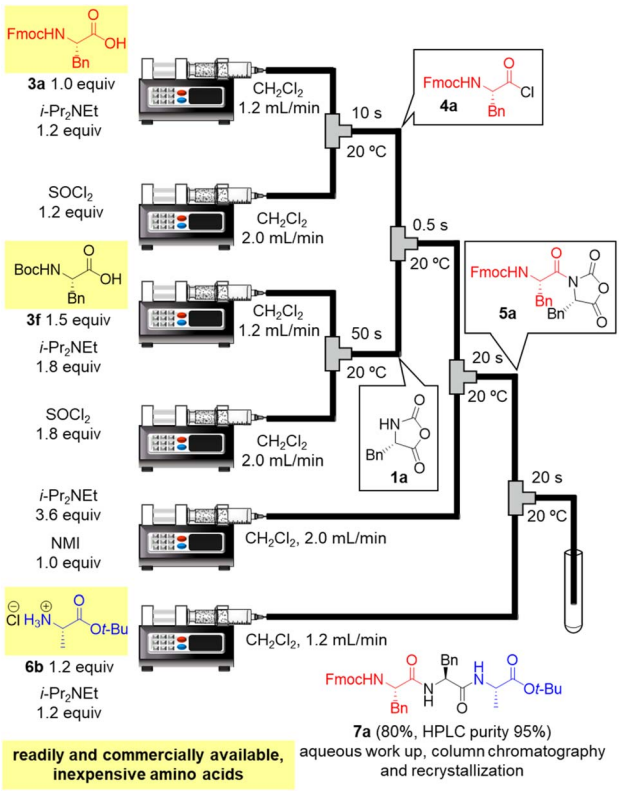

Fig. 3 One-flow tripeptide synthesis from readily and commercially available, inexpensive amino acids **3a**, **3f**, and **6b**.

our synthesis of N-terminus protected tripeptide **7r** with those of Wassenaar's solid-phase synthesis of Fmoc–Ser(*t*-Bu)–Leu–Ala–HMP resin (**7t**) that has the same peptide sequence (for details, see ESI†).[24] Dramatic reductions were achieved in both time (5.2 min mmol^{-1} *vs.* 158 min mmol^{-1}) and cost (787 JPY per mmol *vs. ca.* 5820 JPY per mmol). The batch removal of the Cbz group in **7r** afforded N-terminal-free tripeptide **7s** in a quantitative yield. The second 3CC of **3c** with **1c** and **7s** (64% yield, HPLC purity 93%) and batch removal of the Cbz group afforded N-terminal-free pentapeptide **8b** (92% yield). The third 3CC of **3d** with **1d** and **8b** (64% yield, HPLC purity 90%) and the batch removal of the Cbz group in **9a** afforded N-terminal-free heptapeptide **9b** (91% yield). The formation of a mixed carbonic anhydride from **3e** under micro-flow conditions and the subsequent batch coupling with heptapeptide **9b** afforded the desired protected beefy meaty peptide **10a** (55% yield, HPLC purity 86%). Amazingly, no column chromatographic purification was needed in the synthesis of **10a**. The final acidic removal of *t*-Bu groups and Boc groups and the following reversed phase column chromatographic purification afforded beefy meaty peptide (**10b**) in 85% yield (overall yield 13% in 15 steps, HPLC purity 98%). The structure of **10b** was confirmed *via* ^{1}H NMR, ^{13}C NMR (for details, see ESI,† NMR spectra section), and HRMS. The observed spectra were well consistent with those of commercially purchased **10b**.

Finally, in order to achieve a one-flow synthesis of tripeptide by using only amino acid building blocks that were readily and commercially available, we examined an *in situ* preparation of α-NCA from Boc-protected amino acid **3f** and $SOCl_2$ in the presence of a base (for details, see ESI Table S6†). We also established the optimized amounts of reagents and reaction times for the formation of **1a** as well as that for amidation between **4a** and **1a** (for details, see ESI Table S7†). The optimized conditions afforded the desired tripeptide **7a** in 80% yield using simple silica-gel column chromatography and recrystallization (HPLC purity 95%, Fig. 3). Racemization was not detected in HPLC-UV analysis. It should be noted that the tripeptide was rapidly prepared *via* a one-flow 3CC approach from protected amino acids **3a**, **3f**, and **6b**, which are inexpensive and both readily and commercially available.

Conclusions

We developed a one-flow 3CC approach to peptide chain elongation that is both rapid and mild. The proposed approach is the first to use α-NCAs as both electrophiles and nucleophiles. The key to success was the rapid generation of acid chloride and its rapid coupling with α-NCA in the presence of NMI and i-Pr_2NEt that suppressed undesired reactions of α-NCAs. The developed approach uses only readily removable reagents and substrates, which allows a simple aqueous work-up and recrystallization to afford the desired peptides in high yields and purities without tedious column chromatographic purifications. A scaled-up synthesis could be safely and readily achieved in a highly reproducible manner *via* simply extending the pumping time. In addition, we achieved a total synthesis of octapeptide, beefy meaty peptide, by repeating our developed 3CC approach with only the addition of one column chromatographic purification as the final step. The reductions in both time (*ca.* 1/31) and cost (*ca.* 1/7) were dramatic compared with that of typical solid-phase synthesis. Moreover, a one-flow tripeptide synthesis including *in situ* preparation of α-NCA was realized, which allowed a tripeptide to be rapidly prepared from readily and commercially available protected amino acid building blocks. The developed approach potentially produces longer peptides in one-flow fashion by injecting multiple NCAs. Although we challenged this powerful synthesis, we have not succeeded yet. The developed approach offers a novel and powerful option for the preparation of short peptides and should dramatically accelerate drug/material developments that are based on peptides/proteins.

Data availability

The synthetic procedures, characterization, and spectral data supporting this article have been uploaded as part of the ESI.†

Author contributions

Naoto Sugisawa: conceptualization, data curation, formal analysis, methodology, investigation. Akira Ando: data curation, formal analysis, investigation. Shinichiro Fuse: conceptualization, data curation, project administration and supervision. All authors: writing – review & editing.

 © 2023 The Author(s). Published by the Royal Society of Chemistry

Open Access Article. Published on 12 June 2023. Downloaded on 11/14/2025 3:39:19 AM.
This article is licensed under a Creative Commons Attribution-NonCommercial 3.0 Unported Licence.

Conflicts of interest

There are no conflicts to declare.

Acknowledgements

This work was partially supported by the Grant-in-Aid for Transformative Research Area (B) (21H05081), and the Research Support Project for Life Science and Drug Discovery [Basis for Supporting Innovative Drug Discovery and Life Science Research (BINDS)] from the Japan Agency for Medical Research and Development (AMED) under Grant Number JP22ama121044, and JSPS Fellows (22J12988 to N. Sugisawa). Pd/C was generously provided by Kawaken Fine Chemicals, Japan.

Notes and references

1 (*a*) A. Henninot, J. C. Collins and J. M. Nuss, *J. Med. Chem.*, 2018, **61**, 1382–1414; (*b*) L. Wang, N. Wang, W. Zhang, X. Cheng, Z. Yan, G. Shao, X. Wang, R. Wang and C. Fu, *Signal Transduction Targeted Ther.*, 2022, **7**, 1–27.

2 G. B. Santos, A. Ganesan and F. S. Emery, *ChemMedChem*, 2016, **11**, 2245–2251.

3 V. Agouridas, O. E. Mahdi, V. Diemer, M. Cargoët, J.-C. M. Monbaliu and O. Melnyk, *Chem. Rev.*, 2019, **119**, 7328–7443.

4 (*a*) R. B. Merrifield, *J. Am. Chem. Soc.*, 1963, **85**, 2149–2154; (*b*) H. Yan and F.-E. Chen, *Adv. Synth. Catal.*, 2022, **364**, 1934–1961.

5 N. Hartrampf, A. Saebi, M. Poskus, Z. P. Gates, A. J. Callahan, A. E. Cowfer, S. Hanna, S. Antilla, C. K. Schissel, A. J. Quartararo, X. Ye, A. J. Mijalis, M. D. Simon, A. Loas, S. Liu, C. Jessen, T. E. Nielsen and B. L. Pentelute, *Science*, 2020, **368**, 980–987.

6 V. Martin, P. H. Egelund, H. Johansson, S. T. Le Quement, F. Wojcik and D. S. Pedersen, *RSC Adv.*, 2020, **10**, 42457–42492.

7 A. Isidro-Llobet, M. N. Kenworthy, S. Mukherjee, M. E. Kopach, K. Wegner, F. Gallou, A. G. Smith and F. Roschangar, *J. Org. Chem.*, 2019, **84**, 4615–4628.

8 I. E. Sampaio-Dias, C. A. D. Sousa, S. C. Silva-Reis, S. Ribeiro, X. García-Mera and J. E. Rodríguez-Borges, *Org. Biomol. Chem.*, 2017, **15**, 7533–7542.

9 Y. Zhu and W. D. Fuller, *Tetrahedron Lett.*, 1995, **36**, 807–810.

10 T. Hattori and H. Yamamoto, *J. Am. Chem. Soc.*, 2022, **144**, 1758–1765.

11 G. M. Ziarani, R. Moradi and L. Mahammadkhani, *Arkivoc*, 2019, 18–40.

12 (*a*) R. G. Denkewalter, H. Schwam, R. G. Strachan, T. E. Beesley, D. F. Veber, E. F. Schoenewaldt, H. Barkemeyer, W. J. Paleveda, T. A. Jacob and R. Hirschmann, *J. Am. Chem. Soc.*, 1966, **88**, 3163–3164; (*b*) R. Hirschmann, R. G. Strachan, H. Schwan, E. F. Schoenewaldt, H. Joshua, B. Barkemeyer, D. F. Veber, W. J. Paleveda Jr, T. A. Jacob, T. E. Beesley and R. G. Denkewalter, *J. Org. Chem.*, 1967, **32**, 3415–3425; (*c*) R. G. Denkewalter and R. Hirschmann, *Am. Sci.*, 1969, **57**, 389–409.

13 K. E. Jolley, W. Nye, C. González Niño, N. Kapur, A. Rabion, K. Rossen and A. J. Blacker, *Org. Process Res. Dev.*, 2017, **21**, 1557–1565.

14 C. Shin, Y. Yonezawa and J. Yoshimura, *Chem. Lett.*, 1981, 1635–1638.

15 (*a*) Y. Yonezawa, T. Yamada and C. Shin, *Chem. Lett.*, 1982, 1567–1568; (*b*) C. Shin, Y. Yonezawa and M. Ikeda, *Bull. Chem. Soc. Jpn.*, 1986, **59**, 3573–3579; (*c*) C. Shin, S. Honda, K. Morooka and Y. Yonezawa, *Bull. Chem. Soc. Jpn.*, 1993, **66**, 1844–1846.

16 (*a*) J.-i. Yoshida, *Flash Chemistry – Fast Organic Synthesis in Micro Systems*, Wiley-VCH, Weinheim, 2008; (*b*) J.-i. Yoshida, A. Nagaki and T. Yamada, *Chem.–Eur. J.*, 2008, **14**, 7450–7459; (*c*) J.-i. Yoshida, *Chem. Rec.*, 2010, **10**, 332–341; (*d*) J.-i. Yoshida, Y. Takahashi and A. Nagaki, *Chem. Commun.*, 2013, **49**, 9896–9904.

17 (*a*) S. Fuse, Y. Mifune and T. Takahashi, *Angew. Chem., Int. Ed.*, 2014, **53**, 851–855; (*b*) S. Fuse, Y. Mifune, H. Nakamura and H. Tanaka, *Nat. Commun.*, 2016, **7**, 13491; (*c*) S. Fuse, K. Masuda, Y. Otake and H. Nakamura, *Chem.–Eur. J.*, 2019, **25**, 15091–15097; (*d*) Y. Otake, Y. Shibata, Y. Hayashi, S. Kawauchi, H. Nakamura and S. Fuse, *Angew. Chem., Int. Ed.*, 2020, **59**, 12925–12930.

18 (*a*) Y. Otake, H. Nakamura and S. Fuse, *Angew. Chem., Int. Ed.*, 2018, **57**, 11389–11393; (*b*) N. Sugisawa, Y. Otake, H. Nakamura and S. Fuse, *Chem.–Asian J.*, 2020, **15**, 79–84.

19 (*a*) N. Sugisawa, H. Nakamura and S. Fuse, *Chem. Commun.*, 2020, **56**, 4527–4530; (*b*) R. Okabe, N. Sugisawa and S. Fuse, *Org. Biomol. Chem.*, 2022, **20**, 3303–3310.

20 (*a*) M. L. Bender and B. W. Turnquest, *J. Am. Chem. Soc.*, 1957, **79**, 1656–1662; (*b*) H. K. Hall Jr, *J. Am. Chem. Soc.*, 1957, **79**, 5441–5444; (*c*) C. Faltin, E. M. Fleming and S. J. Connon, *J. Org. Chem.*, 2004, **69**, 6496–6499.

21 M. Akssira, M. Boumzebra, H. Kasmi, A. Dahdouh, M.-L. Roumestant and P. Viallefont, *Tetrahedron*, 1994, **50**, 9051–9060.

22 D. Ben-Ishai and E. Katchalski, *J. Am. Chem. Soc.*, 1952, **74**, 3688–3689.

23 Y. Yamasaki and K. Maekawa, *Agric. Biol. Chem.*, 1978, **42**, 1761–1765.

24 P. D. van Wassenaar, A. H. A. van den Oord and W. M. M. Schaaper, *J. Agric. Food Chem.*, 1995, **43**, 2828–2832.