RSC Advances

REVIEW

View Article Online
View Journal | View Issue

Open Access Article. Published on 08 April 2021. Downloaded on 11/13/2025 9:41:38 AM.
This article is licensed under a Creative Commons Attribution-NonCommercial 3.0 Unported Licence.

Check for updates

Cite this: *RSC Adv.*, 2021, **11**, 13201

Hybrid renewable energy/hybrid desalination potentials for remote areas: selected cases studied in Egypt

Abd El-Hady B. Kashyout,*[a] Amany Hassan,[b] Gasser Hassan,[c] Hassan El-Banna Fath,[d] Abd El-Wahab Kassem,[e] Hisham Elshimy,[f] RanjanVepa[g] and Mohammad H. Shaheed[g]

Received 8th February 2021
Accepted 19th March 2021

DOI: 10.1039/d1ra00989c

rsc.li/rsc-advances

For many socio-economic and demographic issues, majority of the Egyptian population live near the Nile River for thousands of years. Shortage of freshwater resources at remote and rural areas is limiting population settlement and development. Therefore, it is necessary to find alternative solutions including saline water desalination processes to assist obtaining fresh water for domestic and industrial purposes in these remote areas. The energy needed for the desalination process represents another challenge due to the available fossil fuel limitation, increasing prices and their negative impacts on the environment. These challenges may be tackled by applying hybrid renewable energy (RE) resources such as solar and wind energies as the driving power for the desalination technologies. Many studies are conducted in Egypt, Middle East region and worldwide investigating the possibilities of different desalination systems driven by RE. This article presents a recent review of the global desalination processes with a focus on membrane desalination systems such as reverse osmosis (RO), membrane distillation (MD), hybrid desalination technologies and processes as well as advanced plasmonic nanomaterials for water

[a]*Advanced Technology and New Materials Research Institute, City of Scientific Research and Technological Applications (SRTA-City), Alexandria, Egypt. E-mail: akashyout@srtacity.sci.eg*

[b]*Faculty of Engineering, Alexandria University, Egypt*

[c]*Informatics Research Institute, City of Scientific Research and Technological Applications (SRTA-City), Alexandria, Egypt*

[d]*Egyptian Association for Water and Energy (EWE), Egypt*

[e]*Faculty of Agriculture, Alexandria University, Egypt*

[f]*Pharos University in Alexandria, Egypt*

[g]*School of Engineering and Materials Science, Queen Mary University of London, Mile End Road, London E1 4NS, UK*

Prof. Abd El-Hady B. Kashyout is the head of Electronic Materials Department at the City of Scientific Research and Technology Applications (SRTA-City), Egypt. He is a professor of nanoelectronic and energy materials for the preparation and characterization of nanomaterials, thin films for the applications of solar cells, gas sensors, fuel cells, smart materials and supercapacitors. He published more than 70 articles in international journals, supervised about 70 MSc and PhD students and worked in many national and international projects. He is leading a centre of excellence in the field of future and advanced studies, which develops studies in KBE, smart cities and renewable energies.

Dr Amany Mohamed Ahmed Hassan graduated as BSc in Naval Architecture and Marine engineering, Alexandria University (2000) and as a Doctor from the school of Marine Science and Technology in Newcastle University (2011). She works from 2012 till date as an Assistant professor in the Department of Naval Architecture and Marine Engineering, Alexandria University, Egypt, and also a member of the team of the project "Solar-Greenhouse-Desalination System Self productive of Energy and Irrigating Water Demand – STDF/NCP project". Another project is "Renewable Energy Driven Hybrid Desalination System for Remote Areas (RE-RO-MD)" project ID 26214, Egypt-UK Newton-Musharafa Fund: Institutional Links.

© 2021 The Author(s). Published by the Royal Society of Chemistry

Open Access Article. Published on 08 April 2021. Downloaded on 11/13/2025 9:41:38 AM.
This article is licensed under a Creative Commons Attribution-NonCommercial 3.0 Unported Licence.

distillation derived by RE suitable for remote and isolated areas. Some recent activities for coupling desalination systems with hybrid RE carried-out by the co-authors will be highlighted.

1. Introduction

The access to freshwater is an essential need for any community as it is mandatory for domestic daily life activities and for industrial/agriculture activities as well. The freshwater term indicates salinity that is not exceeding 500 ppm, which constitutes only 2.5% of water resources on earth. Fresh water distribution is not uniform around the earth. Vast areas in the Middle East and North Africa (MENA) countries have very limited access to freshwater resources. The shortage of access to freshwater is a key factor limiting the development and prohibiting the residents from using water with the WHO standard.[1]

Globally, water demand is projected to increase by 55% in 2050, mainly due to high GDP growth rate that will increase water demand for manufacturing, power generation and

Prof. Gasser E. Hassan, he is Associate Professor in Mechanical Engineering and Energy, City for Scientific Research and Technology Applications (SRTA-City). He obtained his PhD degree in Fluid Mechanics (CFD), Energy and Resources Engineering (University of Leeds, UK, 2011). He is Certified UN Industrial Development Organization (UNIDO) Consultant for Solar Energy and Thermal Energy Efficiency Audit, Fellow of Academy of Scientific Research and Technology (ASRT), Secretary of Future Studies and Risk Management Council (ASRT), Egypt, Chairman for Egyptian Association for Water and Energy (EWE), and Adjunct professor in Mechanical Engineering Department, in Alexandria University, Arab Academy for Science and Technology, and Pharos University, Alexandria, Egypt. He is leading or participating in different national and international research projects.

Prof. Hisham Galal El-Shimy, Prof. Dr/Hisham Galal Elshimy is a Full professor since 2017, BSc 1995, Master 1999, and PhD 2006. He has published 65 papers in the field of architecture, h-index 5, i10-index 3, quotation 207. He is a member of 12 international research projects and attended 40 conferences, supervised and discussed 12 scientific messages He is the manager of community center since 2017 and the supervisor of students actives in Pharos University since 2010. He is a consultant in the field of urban planning and architecture in about 300 projects since 1995.

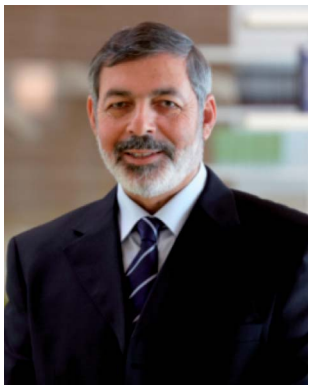

Prof. Hassan El-Banna Fath (h_elbanna_f@yahoo.com) is an expert in desalination and energy technologies with wide academic and industrial experience. Academically, he was a Professor in different universities in Egypt, the UAE, the KSA, Iraq, Qatar and Lebanon. He supervised many MSc and PhD students and established different desalination laboratories, e-learning institutes and centers, led many RDI including Mega Project, published "Desalination Technology" book, co-authored DESWARE, filed six patents and published over 180 papers. Industrially, he is Senior Researcher, Doosan (Koria-UAE), Head of Efficiency (SWCC), Training SAMAREC & SCECO-W (KSA), Process Engineer, AECL/OH, and now the Director, Desalination and Energy Systems (DES) (Canada).

Dr Ranjan Vepa obtained his PhD (Applied Mechanics) in 1975 from Stanford University, USA. He is currently a Senior Lecturer (Equivalent to an Associate Professor) in the School of Engineering and Material Science, Queen Mary, University of London. His research interests include design of control systems and associated signal processing with applications in aerospace, robotics, biomedical engineering and energy systems. In particular, the research interests include dynamics and robust adaptive estimation and control of linear and nonlinear aerospace, energy systems. Dr Vepa is also a Member, Royal Aeronautical Society, London and a Fellow of the UK's Higher Education Academy.

 © 2021 The Author(s). Published by the Royal Society of Chemistry

Open Access Article. Published on 08 April 2021. Downloaded on 11/13/2025 9:41:38 AM. This article is licensed under a Creative Commons Attribution-NonCommercial 3.0 Unported Licence.

domestic sector use by 400%, 140% and 130% respectively.[2] About 40% of the world population will suffer from water scarcity due to these demands. Desalination is the most energy-intensive water treatment process that consumes 75.2 TW h per year, about 0.4% of global electricity and 76 million ton of carbon emission. Energy consumption during the desalination process is mainly dependent on the water sources, nature of existing contamination and the process type itself. The current energy-intensive desalination processes, with 10–15% efficiency, are not sustainable for future water supplies. For future sustainability, innovative membrane materials are proposed but they need 5–10 years of intensive research for commercial production. However, thermally driven desalination technology hybridization can achieve 20–25% of efficiency, close to sustainable production zone.

In Egypt, the increasing need for freshwater is due to the high growth rate of population in addition to the natural shortage of freshwater resources in areas that are located far from the Nile River.[3] This led to high needs for the development of desalination systems that consume minimum energy, mainly depending on renewable resources. Lack of fresh water is also one of the factors causing internal immigration from Upper Egypt and small villages to big cities, causing overload on cities, unemployment and crimes. Hence, there is a big need to develop small-sized and standalone desalination plants that are suitable for rural areas, where lack of fresh water or grid electricity exists.[4]

Desalination systems are classified into thermal and membrane processes. The desalinated feed water may be either brackish water or sea water of different salinity ranges.[5] The desalination system for each salinity has different requirements in order to produce the needed quality of the freshwater. There are different types of desalination systems that vary in initial and running costs, required equipment and the rate of freshwater produced. The energy utilized for the desalination processes may come from many sources such as conventional fossil fuels, wind mills, solar plants and electricity grids. Not all areas that need desalination have access to electricity grid on regular basis. Thus, the need for alternative energy resources is essential for direct community needs and for driving the desalination processes. The utilization of a RE source allows continuous energy supply for the desalination process.

Generally, RE desalination market is often solar energy driven (accounts for about 70% of market). High cost of grid connection for small desalination systems in remote areas limits the widespread use of them and consequently the needs of standalone RE driving systems that enable small communities utilize and benefit from desalination technology systems.

The use of solar energy systems for desalination processes can be either by direct or in-direct methods. The direct methods may include solar still systems, which could be utilized in systems with low yield of pure water but at low cost of production for the simplicity of constructed systems. However, the in-direct systems are considered as suitable options for medium-volume desalination plants.[6] In in-direct methods, solar energy is transformed into electricity that is then used to drive the desalination process. Electrical storage systems in hybrid renewable energy technologies have a great effect in both the desalination performance and total water cost of the desalinated water. In general it could be found as a challengeable issue, which potentially hinders the broad application of PV/RO desalinations. Neglecting, however, challenges associated with the conversion, storage and utilization of RE resources coupled with the operation and maintenance issues thereof, with the attendant critical implications on the overall water production, would be nothing less than unthinkable.[7]

In the following sections, a general review of the desalination systems is given and followed by a survey of the RE-driven desalination systems. An in-depth discussion of challenges facing the use of RE in desalination is then given with emphasis on desalination systems in the MENA region and special attention will be paid to Egypt for raising hybrid RE systems driving hybrid desalination technologies. In addition, a review of desalination technologies mainly RO, MD and Integrated RO–MD systems will be discussed.

Dr Mohammad H. Shaheed is a Reader in Renewable Energy Technology and Robotics at the School of Engineering and Materials Science, Queen Mary University of London. His research interests include design, modelling, and control of hybrid renewable energy systems and robotic/autonomous systems. On the renewable energy side, he has been pursuing research on photovoltaics, wind turbine, and osmotic power (pressure-retarded osmosis – PRO) with application to water treatment and desalination. Dr Shaheed has published over 70 refereed research articles and has supervised more than 20 PhD students/RAs/PDRAs. He is a Chartered Engineer (CEng) and a recipient of the prestigious UK National Teaching Fellow.

2. Desalination systems

Many classifications of desalination technologies can be found in studies,[8–11] and they are illustrated in Fig. 1a. Classifications in some recent works considered the working principles, the main energy input required for the treatment, and the potential for coupling with renewable energy sources.[10] One recent publication demonstrated two hybrid dilution desalination alternatives (namely, FO–RO and UF–RO) in comparison with conventional SWRO desalination.[11] In general, they divided the major processes of the desalination technologies into distillation (evaporation/condensation) including multiple effect distillation (MED), multi-stage flash (MSF), vapor compression (VC), membranes such as RO, MD and electro-dialysis (ED), and crystallization processes. The proportion of recently installed desalination plants in terms of production capacity is shown in Fig. 1b. RO systems are the most common desalination systems

Open Access Article. Published on 08 April 2021. Downloaded on 11/13/2025 9:41:38 AM.
This article is licensed under a Creative Commons Attribution-NonCommercial 3.0 Unported Licence.

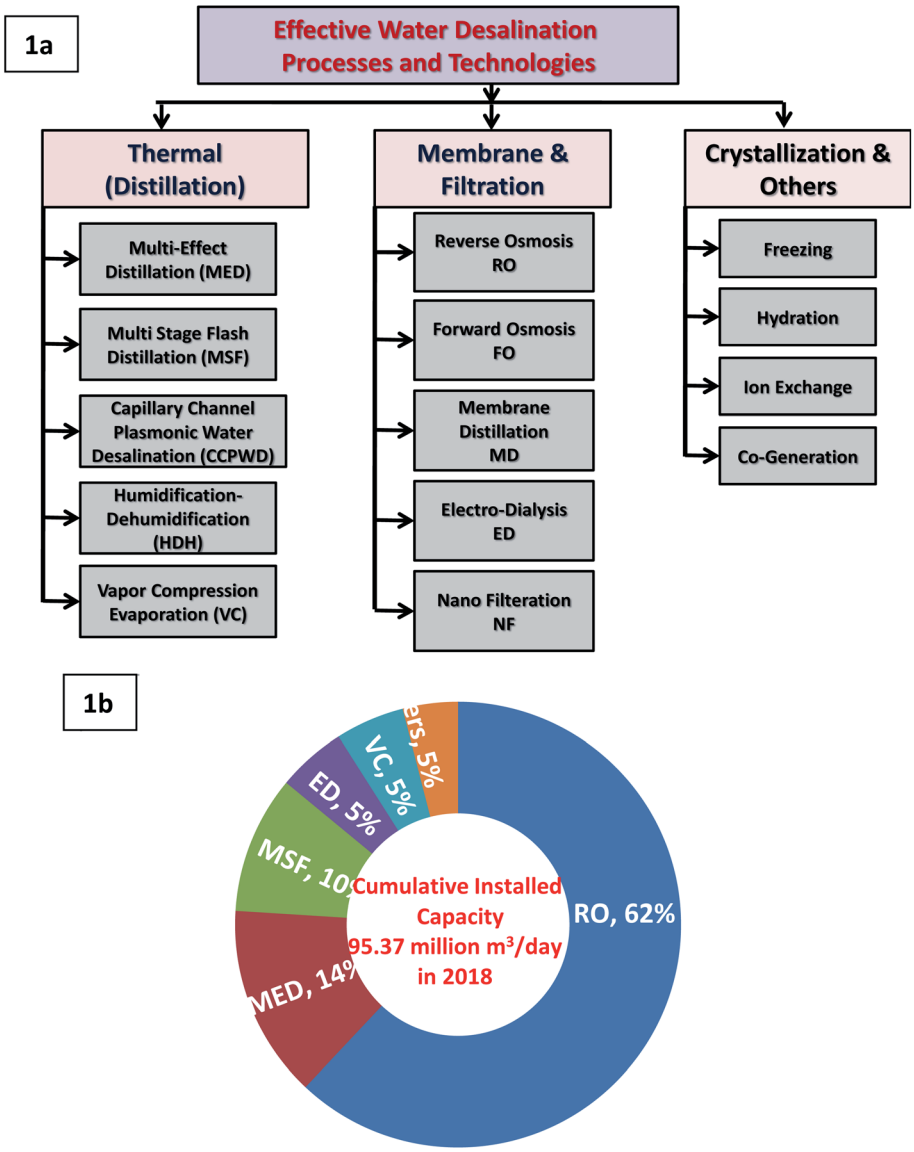

Fig. 1 Worldwide desalination processes. (a) Effective water desalination processes and technologies (adapted from ref. 9). (b) Proportion of installed desalination plants in terms of production capacity in cubic meters per year (adapted from ref. 9 and 14).

(62%) followed by the MED (14%), MSF (10%), ED (5%) and VC (5%). The cumulative global, installed online capacity is 95.37 million m^3 per day in 2018. Table 1 summarizes the forecast of the water desalination costs up to 2035.[12] The desalination water cost using RO is expected to decline from US$0.8–1.2 in 2016 to US$0.6–1 in 2022 and then to US$0.3–0.5 in 2035. This will happen through the advancement in the technology especially in the construction costs, electrical energy consumption, primary energy use and membrane productivity. A decline in electrical energy consumption and primary energy use is essential for this reduction in production costs. Proposed universal performance ratio (UPR) based on primary energy can provide a common platform for comparison of all kinds of

Table 1 Forecast of RO desalination costs for medium- and large-sized projects[12]

Parameter for best-in class desalination plants	Year 2016	2022	2035
Cost of water (US $ per m^3)	0.8–1.2	0.6–1.0	0.3–0.5
Construction cost (US $ per MLD)	1.2–2.2	1.0–1.8	0.5–0.9
Electrical energy use (kW h m^{-3})	3.5–4.0	2.8–3.2	2.1–2.4
Primary energy use (kW h m^{-3})	7.45 (ref. 13)	—	—
Membrane productivity (m^3 per membrane)	28–47	35–55	95–120

 © 2021 The Author(s). Published by the Royal Society of Chemistry

Open Access Article. Published on 08 April 2021. Downloaded on 11/13/2025 9:41:38 AM. This article is licensed under a Creative Commons Attribution-NonCommercial 3.0 Unported Licence.

desalination processes and primary energy use is calculated in terms of electrical, thermal and renewable energy.[13]

In the next sub-sections, a review of the desalination technologies, mainly RO, MD, integrated RO–MD and hybrid desalination systems will be presented.

2.1. Membrane distillation (MD)

Conventional thermal desalination systems (as MSF, MED and VC) are basically evaporation and condensation of saline water, as its temperature is at saturation value where evaporation starts and continues as the thermal energy still in operation. Water is then condensed through a heat exchanger (condenser), and salty water recovers the condensation energy and remains with higher salinity, and it is ultimately removed as brine.[15]

Capillary Channel Plasmonic Water Desalination (CCPWD) systems have been recently developed and considered as one of the emerging technologies.[16] They used many nanomaterials as evaporators. These materials include gold plasmonic nanomaterials, graphenes, carbon nanotubes, and graphene oxides. Capillary channels are constructed from carbon foams, cellulose fibers, porous NiO discs, cotton rod-polystyrene and polytetrafluoroethylene. Thin-film structures of super dark metasurface composed of dispersing gold plasmonic nanostructures in a filter paper demonstrated a solar thermal efficiency of 87% when exposed to an intensity of only 2.3 Sun, maintaining a stable efficiency of 90% at higher solar intensities.[17]

Other thermal processes as MD can however operate at temperatures below the saturation conditions as will be discussed below. MD systems usually are known as a membrane separation thermal process that the vapour molecules transfer with the force of partial pressure difference across micro-porous hydrophobic membranes.[17] The MD system has four well-known configurations; (i) direct contact MD (DCMD), (ii) air gap MD (AGMD), (iii) sweep gas MD (SGMD) and (iv) vacuum MD (VMD). MD processes have many advantages over RO technologies such as lower driving pressure, less fouling as well as high feasibility to combine with other processes (UF, NF or RO), creating integrated separation systems with higher performance. However, MD disadvantages include more cost-effective, higher rejection factor and relatively large membrane pore size.

The MD membrane is identified by its main characteristics, which are as follows: liquid entry pressure (wetting pressure), membrane thickness, membrane porosity and tortuosity, mean pore size and pore size distribution and thermal conductivity. The membrane used in the MD system should have low resistance to mass transfer and low thermal conductivity to prevent heat loss across the membrane material. Other factors to be considered are high thermal stability of the membrane in raised temperatures and good values for resistance to chemicals, such as acids and bases. The pore size optimum values are determined for each feed solution and operating condition. The operating parameters of the membrane are feed temperature, the concentration and solution feature, recirculation rate, air gap (in air gap MD) and membrane type.

The advantages of the MD process include lower operating pressure and operating temperatures (below the boiling point of feed solution), lower vapour space, unlimited to high osmotic pressure and very high separation factor of non-volatile solute. Potential applications for concentrating aqueous solutions or producing high-purity water can use any form of low-grade waste heat or be coupled with solar thermal energy systems, which makes it attractive for the production of potable water in arid regions.

An extensive review of the developed MD systems for desalination processes was presented by ref. 18. In this reference, a technical review and assessment of MD is presented and addresses the latest development in MD configurations, membranes, integration with other processes and the process modelling. The MD high membrane area-to-volume ratio allows it to operate at a lower temperature with respect to traditional distillation processes and exploits operational simplicity for applications in integrated membrane systems or as stand-alone small desalination units. The limitation of MD usage is due to the low water flux and reduction of long-term performance due to the wetting of the hydrophobic microporous membrane. MD membranes' cost is still of high price for the wide application distillation systems.

Gonzalez *et al.*[19] discussed the performance of different MD membranes properties, configuration, wetting and fouling, energy consumption and water cost. As for the material, it was found that the PTFE (polytetrafluoroethylene) membranes perform better than PVDF (polyvinylidene) and PP (polypropylene) membranes. Larger scale plants are needed to illustrate the feasibility of using MD sustainable water production.

2.2. Reverse osmosis (RO) technology

RO technology is known to be a process in which a solvent like water passes through a semi-permeable membrane in the direction opposite to that for natural osmosis when a hydrostatic pressure overcomes its resisting osmotic pressure. RO technique is used as a water purification technology where a porous membrane is used to separate dissolved ions, molecules, and larger particles from saline water.

A RO desalination system is composed of four main subsystems; pre-treatment, pumping with high pressure, membrane stacks, and post-treatment. The high-pressure pump forces the pre-treated feed water to flow through the membrane surface. Brackish water (BW) of salinity $\leq$20 000 ppm operates with a pressure ranging from 17 to 27 bars for delivering efficient fresh water through the RO membranes. These low pressures applied in BWRO systems allow the application of low-cost plastic-made components. RO technology has many major impacts that may limit its wide application such as the environmental effects of the brine rejection and the limited recovery of product water for high-salinity feed water. Increasing the brine concentration in the RO systems limits the recovery ratio, leading to an increase in the osmotic pressure, and consequently, the energy consumption and scaling on the surface of RO membranes. This recovery ratio is between 35 and

Open Access Article. Published on 08 April 2021. Downloaded on 11/13/2025 9:41:38 AM.
This article is licensed under a Creative Commons Attribution-NonCommercial 3.0 Unported Licence.

45% for seawater and increases to 75–95% for brackish water as reported by ref. 20.

Discharging the brine concentrates to surface water causes serious effects ranging from the change of water salinity and consequently the dissolved oxygen (DO) concentration in water. This will greatly affect the organ life around the area of discharging. Mickly[21] determined a salinity limit of less than 10% for surface water discharge. It could also be noted that the rejected brines may contain higher concentrations of toxic contaminants depending on the composition analysis of the brackish or seawater that will affect both human life and agriculture activities.

The increase in the recovery ratio of RO membrane causes a consequent increase in the osmotic pressure through the feed side of the RO unit. This requires an increase in the feed pressure and, therefore, the required feed flow and specific energy will decrease for the same specific product flux. The minimum required energy depends on the feed water salinity and recovery ranges between 50 and 55%.[22]

A review on the RO pre-treatment technologies was presented by S. Jamaly, *et al.*[23] These technologies include two main directions; conventional one like coagulation, flocculation, and scale inhibition and the second one is non-conventional such as micro-filtration (MF), ultra-filtration (UF) and nano-filtration (NF). Operational costs of non-conventional pre-treatment systems are usually higher than the conventional one. They produce water with higher quality and the membrane capital cost increases by 20–40%. In cases of high-salinity seawater and sites with limited space, the membrane technologies (UF/NF) pre-treatment systems favoured their selection in desalination systems.

Nanofiltration (NF) membranes are utilized in pre-treatment processes for many benefits to raise the RO flux and recovery rate as well as reduce the replacement rate of RO membranes. NF also has the ability to treat surface water with poor quality and reduce cleaning and disinfection requirements for the RO membranes. This pre-treatment step of incorporation of the low-pressure NF membranes increased the life span of the high-pressure RO membranes by about 20–30%.

2.3. Hybrid desalination technologies and processes

RO desalination processes have certain well-known problems, including the polarization formed on films due to the application of high pressure during operation and the produced by-products of bacteria and fouling that may be generated, which cause high energy consumption. Another problem of the brine disposal (as almost all desalination processes) is due to the limited recovery of water. In addition, RO product water salinity may be high and requires another costly pass. These problems may, however, be overcome by integration with thermal membrane processes such as membrane distillation (MD)[22] of near distilled water quality (<50 ppm). Therefore, hybrid desalination systems may exist in many configurations including reverse osmosis/membrane distillation (RO–MD), reverse osmosis/pressure-retarded osmosis (RO–PRO) and RO–MD–PRO.[24] The RO–MD hybrid system is intended to reduce the volume of RO brine by 30% and the RO–PRO hybrid system aimed at a power density of 7.5 W m^{-2} in pilot scales. Hybrid systems composed of RO–MD–PRO use wastewater plants as a feed solution, while MD brine is used as a draw solution. Other technologies to recover lithium or other valuable metal ions from the brine of RO or MD and manufacture construction materials such as paving blocks may be included in such hybrid systems. Compared to conventional sea water reverse osmosis (SWRO), the mixing dilution desalination (MDD) process coupled with hybrid ultra filtration–reverse osmosis (UF–RO) technology had the lowest contribution to global warming and the depletion of ozone layer but it had higher impacts on aquatic resources and marine depletion. Scenarios substituting the conventional energy sources with renewable energy sources to power the water treatment options favor the MDD process coupled with hybrid UF–RO technology and prove the hybrid UF–RO process as the most environmentally favorable compared to the conventional SWRO and hybrid forward osmosis (FO)–RO.[25]

Other hybrid desalination processes usually constituted thermal/RO systems, combining the benefits of high separation efficiency of multistage flash (MSF) and low energy consumption of RO.[26] The MSF desalination process is mainly based on the flash evaporation principle, where seawater is heated until boiling while exposing to reduced pressure. Generally, the flashing chamber receives the heated seawater by low pressure steam up to 90–120 °C. It starts to boil and evaporate with the effect of flashing.[27] The remained brine passes to the next stage in another flash chamber, with the exposure to further flashing processes under low pressure, which means that water is flashed in multisequence flashing without any additional heat. For each stage, the pressure is maintained below the pressure corresponding to the saturation temperature of the stage feed. Vapour is produced and then it condensed and cooled by preheating the incoming seawater that reduces the cost of the MSF process with the introduction of such heat regenerative step.

The multiple effect distillation-adsorption distillation (MED-AD) hybrid desalination system was experimentally presented.[28] A high increase in water production (two to three folds) had been recorded that was attributed to the synergetic operation of the conventional MED and the AD systems. The hybrid cycle was demonstrated using feed portable water and the cycle performance presented here can vary with real sweater operation. The integration between MED and AD systems prove that it is simple and involved no major moving parts. Therefore, this hybridization of the thermally driven cycles of MED-AD has demonstrated their excellent thermodynamic synergy between the thermally driven processes. A quantum improvement in the energy efficiency as well as increasing water production is expected. The advent of the MED-AD cycles is one such example where seawater desalination can be pursued and operated in cogeneration with the electricity production plants.[29]

A proposed system consists of a tri-hybrid desalination integration to enhance the overall recovery up to 81% instead of the present 56%.[30] They supposed to leave the conditioned brine from the RO processes and supply the multi-evaporator adsorption

 © 2021 The Author(s). Published by the Royal Society of Chemistry

Open Access Article. Published on 08 April 2021. Downloaded on 11/13/2025 9:41:38 AM.
This article is licensed under a Creative Commons Attribution-NonCommercial 3.0 Unported Licence.

cycle (RO + ME-AD) driven by low-temperature industrial waste heat sources or solar energy. A developed FORTRAN software was used to conduct the mathematical model of the overall system. The concentration of the rejected final brine from the tri-hybrid cycle can vary from 166 000 ppm to 222 000 ppm if the RO retentate concentration varies from 45 000 ppm to 60 000 ppm. Economic analysis of this proposed tri-hybrid cycle shows that it can achieve the highest recovery of about 81% accompanied by the lowest energy consumption of 1.76 kW h_{elec} m^{-3}.[31]

The membrane-based RO method is known to be more energy efficient than the MSF/MED, and therefore, they have attained merely less than 13% of the thermodynamic limit, where the best overall specific electricity consumption (SEC) of desalination is about 3 to 5 kW h_{elec} m^{-3}, corresponding to 6.0 to 10 kW h_{pe} m^{-3} with a weighted power plant efficiency of 57%.[32]

3. Desalination systems driven by RE

RE will have the biggest growth share in the electrical/thermal power production, with 46% of power demand in 2030.[33] Global electricity generation growth will be partially led by photovoltaics and followed by wind energy, hydropower, and bio-energy. Global electricity demand by 2030 will be shared through hydropower plants by 17%, wind energy by 14%, photovoltaic solar by 7% and bio-energy by 5%. RE drivers of the desalination systems can be divided into four main categories: wind, solar (photovoltaics or solar collectors), waves and tidal and geothermal energy.

Fig. 2a shows how RE resources could be integrated with different desalination technologies. These can be discussed as follows:

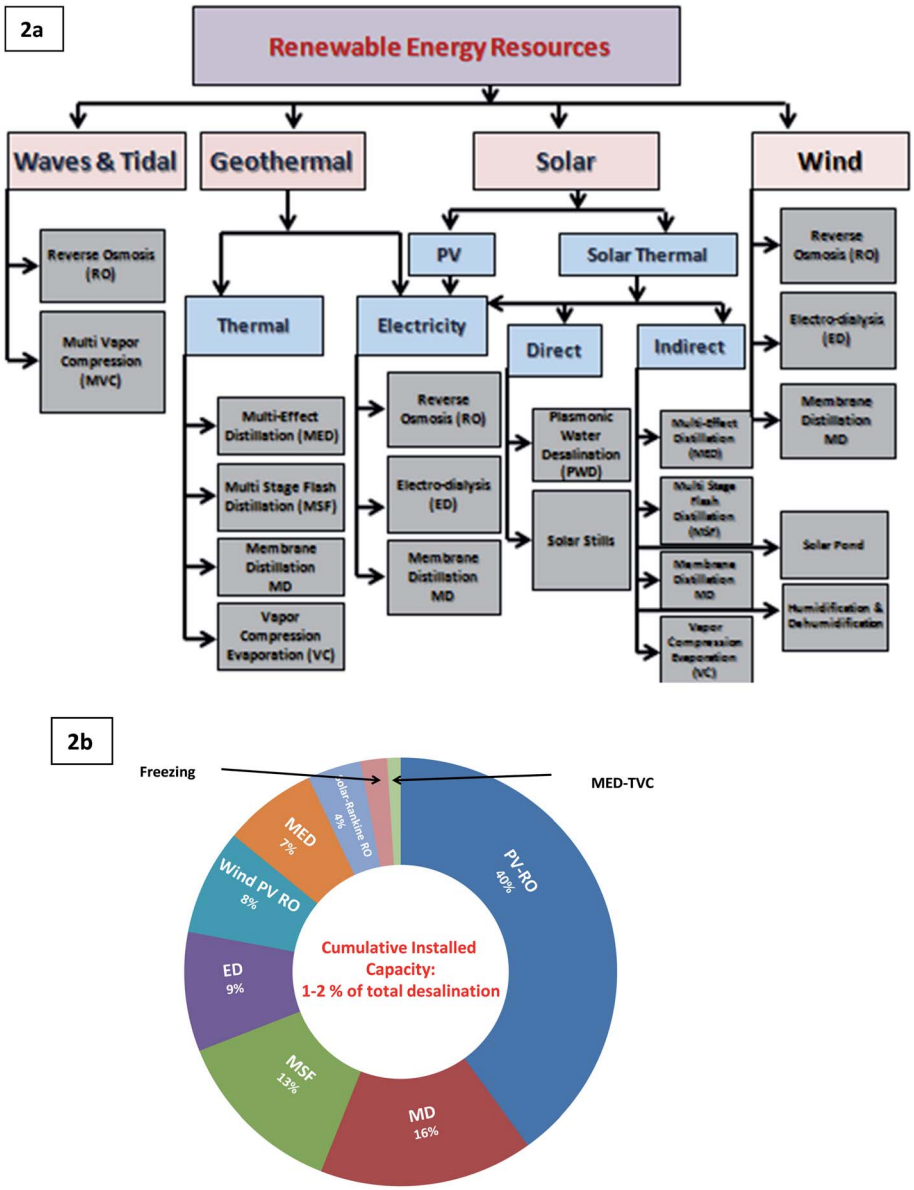

Fig. 2 RE-driven desalination, (a) integration of RE with desalination technologies, (b) share of globally installed water desalination technologies coupled with renewable power sources (adapted/reproduced from ref. 36 with permission from Elsevier, copyright no. 5032710255216).

Open Access Article. Published on 08 April 2021. Downloaded on 11/13/2025 9:41:38 AM.
This article is licensed under a Creative Commons Attribution-NonCommercial 3.0 Unported Licence.

3.1. Solar desalination technologies

Solar energy can be captured for (1) electrical energy generation either by photovoltaic (PV) (or concentrated PV) devices and (2) directly absorbed using solar collectors/concentrators (or solar ponds) as thermal energy.[34] Solar desalination technologies are also classified into direct and indirect solar desalination types. Solar PV/CPV can drive RO desalination with several advantages[35] including:

(1) RO process requires one source of energy (which is electricity).

(2) RO is a one-phase (liquid) desalination process.

(3) RO requires less specific energy consumption compared to other technologies.

(4) RO plant is made up of modules, which is easy to install, maintain, operate, and requires compact space.

(5) The driver PV/CPV modules can be installed on the roof of the RO building (*i.e.* PV/CPV panels will not need any additional areas).

(6) PV/CPV is modular, easy to install, with low maintenance costs.

(7) PV/CPV modules operate well in arid areas, produce direct current to drive DC motors, and are independent of the main electricity power supply.

3.2. Solar thermal desalination

The indirect solar thermal desalination plants are separated into two main subsystems; (i)- solar collector (can be a flat plate, evacuated tube or solar concentrator) and (ii)- a thermal desalination unit. The solar collector can be coupled with any of the thermal desalination processes, which use the evaporation and condensation principle, such as: MSF, MED, VC, and MD.

Fig. 2b shows the world-wide use of the various desalination technologies using solar power sources.[7,36] Share of globally installed water desalination technologies coupled with renewable power sources shows an accumulated desalination capacity of about 1–2% of the total water desalination with 40% contribution from RO-PV systems.

3.3. Typical desalination system powered by solar PV

Photovoltaic (PV) systems are well known to directly convert sunlight into DC electricity using cells made from silicon or other semiconductor materials. The cells are connected together to form a PV module. They can then supply this electrical power to drive either RO or ED desalination technologies.[37]

Fig. 3 shows an assembly of a typical RO desalination plant coupled with a PV generator. This configuration collects (i) a set of storage battery blocks with the system to stabilize the energy input to the RO unit and to compensate for solar radiation variations and (ii) a charge controller to protect the battery block from deep discharge and overcharge, and RO desalination system.[38] The author discussed the different types of PV-RO combined systems. These systems are RO powered by a battery-less PV system, RO powered by PV connected to a displacement pump *via* a variable DC to DC converter and PV connected to the power grid. In the case where a PV-RO system is powered without battery,[39] the desalination rate was found to increase by 5% if the feed pressure is operated under varied values depending on the PV output power.

It could be explained also when using a permeate buffer tank with varying feed pressure, the production is 36% and 28% higher than that of constant and variable pressure operation of the plant without using a buffer tank. Plant start-ups and shutdowns are determined from the signals of both low levels and high levels from the permeate tank. The overall system capability and its tank volume could be designed, so that the plant has the ability to run for several hours continuously with maximum performance. This clearly means that the less frequently the plant is shut down, the better the system performance.

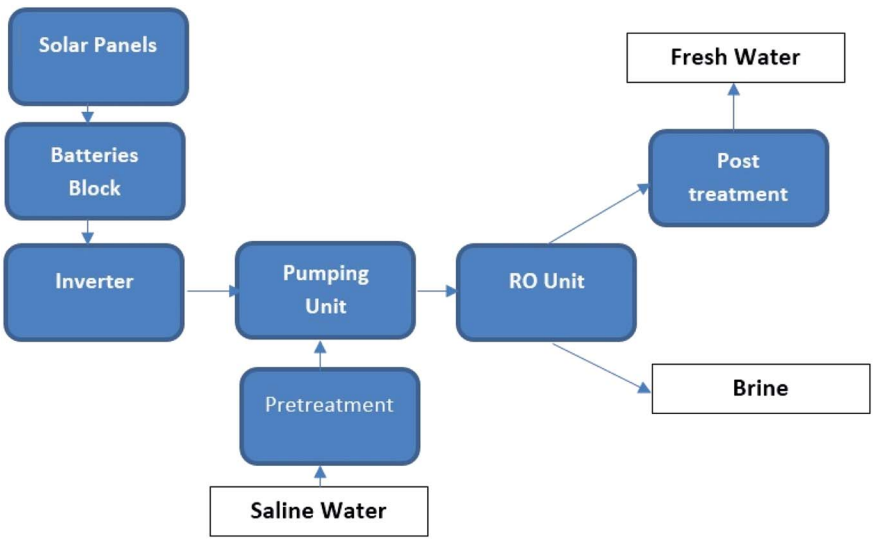

Fig. 3 RO desalination unit coupled with a PV generator.

 © 2021 The Author(s). Published by the Royal Society of Chemistry

Open Access Article. Published on 08 April 2021. Downloaded on 11/13/2025 9:41:38 AM.
This article is licensed under a Creative Commons Attribution-NonCommercial 3.0 Unported Licence.

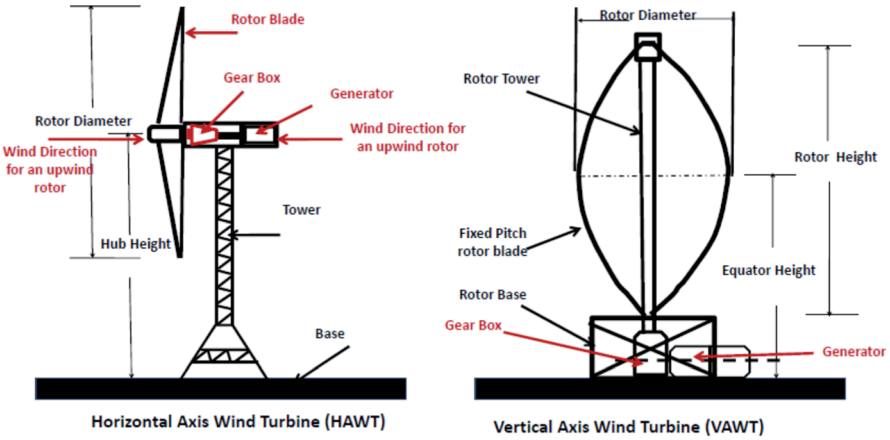

Fig. 4 A sketch representing the common structure of horizontal- and vertical-axis wind turbines (adapted/reproduced from ref. 61 with permission from Elsevier, copyright no. 5032730321770).

Helal *et al.*[40] explored the fully solar-driven PV–RO plant and found that the highest capital cost among three designs, US \$18 277 per year. In addition, it was also found that the cost of water production from the fully solar-driven PV-RO plant was 7.34 \$ per m^3 which is very competitive at that time with that of the diesel-assisted PV–RO plant, which was 7.21 \$ per m^3. It was also found that the utilization of battery-less PV with RO is more economical than diesel, but it was less economical than the use of electrical power grid.

Kaya *et al.*[41] calculated the levelized cost of water (LCW) in Abu Dhabi desalination plant and found that PV-driven seawater RO (SWRO) desalination plant has total energy consumption of 3–4 kW h m^{-3} with an investment cost of 900–2500 \$ m^{-3} d^{-1}, which yields an LCW of 0.5–1.2 US \$ per m^3. The estimates are also made for PV-driven brackish water RO (BWRO) plant that has a total energy consumption of 0.5–2.5 kW h m^{-3} with an investment cost of 300–1200 \$ m^{-3} d^{-1}, which yields an LCW of 0.2–0.4 US \$ per m^{-3}. The author indicated that the desalination water cost has been dropped by about 14 times, which is directly related to the large drop in PV prices between 2008 and 2019.

A recent review discussed the consumption of energy in desalination processes, where a large amount of electricity and heat derived from fossil fuels is consumed to produce fresh water.[42] They reviewed a photovoltaic thermal collector integrating desalination technologies such as solar still, humidification dehumidification, multiple effect distillation, reverse osmosis, multiple stage flash and membrane distillation. The primary focus was made on the fruitful utilization of electricity and heat from the photovoltaic thermal collector in desalination systems to reduce cost and primary energy consumption, and to improve overall system performance. When comparing the overall performance of coupling photovoltaic thermal with desalination systems, it showed better efficiency than the desalination systems coupled with separate photovoltaic panel and/or solar thermal collector from the energy consumption point of view. The stored thermal energy using heat recovery from the PVT panels is a good way to produce fresh water during the times of the off sun shine. Storage of thermal energy from the PVT panel (or) an electric heater powered by the PVT panel in the basin of solar still provides the opportunity for standalone desalination during off sunshine hours. They concluded that photovoltaic thermal/concentrated photovoltaic thermal coupled solar stills are more self-sustainable and suitable for standalone desalination in remote locations than all other models of solar stills.

Another option is to have the PV connected to the electric power grid,[43] as the central-grid PV systems configuration is evaluated to be more viable than the off-grid PV systems. In this case, the PV capacity is to be increased and extra energy to be sold to the grid and to get the energy back from the grid during the periods for which solar radiation is low. This solution is sending all produced PV electricity to the grid and running the RO from the grid.[44] This solution is seen as the best among the solutions in case the grid is close to be connected to. In this case, batteries are not connected with PVs because of their high capital and running costs that will increase the LCW. Generally, partial preheating of feed water improves the RO performance; however, most of the PV–RO systems do not have to use the feed water preheating technique whereas most of the solar ORC (Organic Rankine Cycle)-RO use it benefiting from the heat rejection from the ORC. However, when the energy recovery device (ERD) is used, the pre-heating of feed water is not required. Most of the implemented RO plants are driven by PV, because it is still having the lowest cost so far. As for the Research & Development (R&D) in RO, there is a need to redesign new types of membranes to increase their effectiveness. In addition, the disposal of the brine in many desalination systems is an important issue as it affects the aquaculture and the environment.

Silva Pinto *et al.*[45] presented a review over the cost determinants: site selection (location near the source of feed water, cost of energy) and complete system selection, feedwater quality (salinity, level of treatment, type of desalination process required, extent of pre-treatment needed, organic load), and operation and maintenance (O&M) costs. It was found that the hybrid technologies may be dominant and under special

Open Access Article. Published on 08 April 2021. Downloaded on 11/13/2025 9:41:38 AM. This article is licensed under a Creative Commons Attribution-NonCommercial 3.0 Unported Licence.

conditions can offer increased and more stable production of potable water.

Eltawil *et al.*[46] presented a deep study comparing the different RE technologies that powered many desalination systems. The authors found that plant costs are varied according to: (1) the quality of inlet water (as the lower concentration of TDS in feedwater requires less consumed energy for the treatment process compared to higher TDS in the inlet water); (2) the plant capacity where it affects the size of treatment units; (3) pumping; (4) water storage tanks and water distribution system and (5) site characteristics. Pumping cost and pipe line installation costs can be reduced if the water source and discharge point are near to the plant site. Other factors are related to water intake, pre-treatment, and local/state regulatory requirements. Difference between brackish and sea water desalination is mainly the pumping energy consumption. Membrane replacement costs and maintenance are relatively small. The study showed that the usage of wind in conjunction with the membrane process in desalination would result in lower energy consumption than that with PV. When applying to brackish water desalination, RO and ED powered by wind turbines are usually the best selection. In addition, RO is considered to be the cheapest option when considering low and high production capacities when compared to other technologies. A recent study[11] discussed the life cycle cost (LCC) for dilution desalination systems in off-grid locations, where water reuse could be integrated with seawater desalination technology. The economic analysis in this study involved the life cycle assessment (LCA) models that compare baseline RO desalination and other two proposed alternative membrane processes, namely, hybrid FO–RO and UF–RO. The LCA consists of three different assessments, each involving capital expenditure (CAPEX) and operational expenditure (OPEX) presented in the net present value (NPV) and total water cost (TWC). The economic parameters are considered to calculate TWC per cubic metre of water produced every 365 days of drinking water production at 100 m^3 per day for the 20 year lifetime of the project. Operational expenditure comprised energy, labour, maintenance, and cleaning costs, including membrane replacement costs and the chemical costs involved in the cleaning procedure. The LCC analyses were conducted for commercial-scale dilution desalination systems on a remote island in Australia. The results indicate that an FO–RO system costs less to produce water than a UF–RO system (2.88 and 2.91 AU \$ per m^3, respectively). The two proposed dilution desalination systems are comparable to standalone SWRO (3.10 AU \$ per m^3) with a higher CAPEX (11% and 13%, respectively for FO–RO and UF–RO) resulting from an extra membrane to pretreat the low-pressure SWRO system. The reduction in OPEX due to the energy savings in dilution desalination was quantified as 7% and 6% lower in FO–RO and UF–RO, respectively.

The direct usage of PV field as a power source for producing cooling and desalination is quite difficult mainly because of the type of motors that are less powerful in DC current. However, the coupling can be made easily with the use of electrical batteries.[47] In addition, the PV requires frequent cleaning and maintenance from moisture, soiling in villages and power dumping or shutdown for peak load management in solar thermal and PV. PV requires high solar light (global radiation) for generation of electricity. However, high heat or high temperature and high relative humidity reduce the PV performance.[48] New materials for PV that are independent of temperature are needed.

The cost of power generation though PV is high compared to the conventional method. However, this cost can be compensated by environmental benefits. This leads to installation of a greater number of PV and hence larger space.[49]

Charcosset[50] showed that the RE such as solar, wind, and wave could drive membrane processes including RO, MD and ED. Each type of RE has its own advantages that make it suitable to certain applications. Usually, they do not release gaseous or liquid pollutants during their operation. In their technological development, the RE range from technologies that are well established and mature to those that need further research and development.

4. Solar energy in Egypt

International Renewable Energy Agency published "Renewable Energy Outlook Egypt" (IRENA, 2018)[51] and explained that the country has a plenty of sunshine and enjoying high solar energy radiation and is one of the most appropriate regions globally to take advantage of solar energy resources for both thermal and electricity generation. Solar atlas for Egypt has been issued in 1991 and declared that the country has an average of annual sunshine between 2900 and 3200 hours. Annual total radiation intensity ranges from 2000 (north) to 3200 (south) kW h m^{-2} y^{-1}. Moreover, Egypt National Renewable Energy Agency (NREA, 2018)[52] issued the latest version of the Solar Atlas of Egypt, where more detailed data are given and the average values of the issued solar energy maps are depicted from a 15 year climatology radiation data of the Direct Normal and Global Horizontal Irradiances (DNI and GHI respectively) expressed in W m^{-2}. These data cover the territorial Egyptian region with a spatial resolution of $0.05° \times 0.05°$. The data covered the mean monthly DNI and GHI from January of 1999 to December of 2013 as well as the climatological monthly means and the solar radiation atlas. The 15 year average monthly DNI and GHI data disclose clear summer months with seasonal variability standing the maximum solar inputs and the minimum in winter months. In all months, the impact of distinct human activities in large cities is highlighted mainly in northern Egypt, *e.g.* Alexandria, along the Nile valley and in the Nile Delta. In April, May and September, the influence of dust is high in the southern part of Egypt, while the cloud presence can be extended in October in addition to the spring season as a result of the overall climate change.

Hassan *et al.*[53–56] investigated the performance of many sunshine-based models for Egypt to estimate the expected monthly average global solar radiation on a surface horizontally adjusted. The model was developed with the aid of some measured existed data either for globally recognized solar radiation and other meteorological measurements from the existing local stations. The importance of this study is to determine the performance of these models and evaluate them

 © 2021 The Author(s). Published by the Royal Society of Chemistry

Open Access Article. Published on 08 April 2021. Downloaded on 11/13/2025 9:41:38 AM. This article is licensed under a Creative Commons Attribution-NonCommercial 3.0 Unported Licence.

using the most common standard statistical indicators. The analyses suggested that Robaa Model (All Egypt formula) is the most accurate for forecasting the global solar radiation among all other global solar models of Egypt under investigation. While sun-shine based models demonstrate accurate estimation for exploring meteorological data, they are difficult for the practical applications in the sites where these data are not available. Other meteorological parameters like terrestrial temperature can be applied to the present new models in other studies as alternatives to the widely used sunshine-based models when Sun radiation data are unavailable.

Elsayed *et al.*[57] investigated the total interpretation of a large number of models (31) for the estimation of the monthly averaged daily global solar radiation based on a horizontal surface. To make accurate evaluation, over 20 years of the measured global solar radiation data in the location of New Borg El-Arab city (latitude 30° 51′ N and longitude 29° 34′ E) are used for the validation of the models. These models are divided into six different categories. InciTürkToğrul model and Can Ertekin model, which are based on extra-terrestrial radiation and solar declination, showed the best performance.

5. Wind energy in Egypt

The Egyptian Wind Atlas (Wind Atlas for Egypt Measurement and Modelling 1991–2005) explores that the country is gifted with abundant wind energy resources (IRENA, 2018).[51] The annual average wind speed over Egypt is greater than 2.2 m s^{-1} for most areas. Suez gulf and red sea cost areas are considered to be one of the best locations in the world for wind power production because of their high and stable wind speeds that reach on average values between 8 and 10 m s^{-1} at a height of 100 meters, along with the availability of large uninhabited desert areas. Atlas wind data suggests new promising regions in Beni Suef and Menya Governorates (East and west of the Nile River) and El-Kharga oasis in the west desert of Egypt. They offer wind speeds that vary between 5 and 8 m s^{-1} and are suitable for electricity generation and other applications such as water pumping.

The Mediterranean Sea coast has a mean wind speed ranging between 2 and 6 m s^{-1}.[58] Most of the modern wind turbines usually operate on a horizontal axis mode, but vertical-axis turbines can also be used in some applications, as shown in Fig. 4. An advantage of the vertical-axis turbines is that they do not have to be manually or digitally oriented towards the wind, but rather can utilize wind from any direction without adjustments.

In Egypt, the potential of wind energy should be pushed for the paving desalination technologies, which consume a lot of electrical power such as RO systems. Present onshore wind power cost reached about 0.053 \$ kW^{-1} h^{-1} according to IRENA estimation in 2019 that are compatible for the application of desalination processes[59]

The choice for the combinations of RE desalination systems is defined by feed water quality (salinity) and the requirements for product water. Overall a wind powered RO plant is considered to be the most cost-efficient.[60]

5.1. Wind-RO systems

Since RO technology is considered as one of the lowest energy requirements for the desalination process and coastal areas have the high availability of wind power resources, the wind powered desalination systems represent a major alternative of RE-desalination.[62]

Wind-powered RO plants have been implemented in Croatia,[63] Norway (ENERCON project),[64] and Australia.[65] Feron, *et al.*,[66] developed a theoretical study and concluded that the economic use of a wind-powered RO plant may be restricted to areas with high wind speeds and high fuel prices. He demonstrated the economic feasibility of the wind-powered RO desalination systems in the cases of decreasing RO plant cost with the continuous development of membrane technologies, decreasing wind turbine and system costs as well as steady or decreasing fossil fuel costs. Kiranoudis *et al.*[67] concluded that the unit cost of freshwater production by a conventional RO plant powered by wind turbines can be reduced up to 20% for regions with an average wind speed of 5 m s^{-1} or higher.

A small-scale wind-powered RO desalination system was constructed and tested in Hawaii, for the brackish water desalination.[68] These authors showed that at an average wind speed of 5 m s^{-1}, brackish feedwater at a total dissolved solid concentration of 3000 mg l^{-1} at a flow rate of 13 l min^{-1} could be processed. The average rejection rate and recovery ratio were 97% and 20%, respectively.

5.2. Hybrid solar PV-wind power desalination systems

Some recent research studies have focussed on studying the use of hybrid (solar and wind) RE systems to power desalination systems in Egypt. A study was undertaken to design, install and monitor the performance of RO desalination unit for ground water in remote areas powered by hybrid (PV and wind turbines) systems in the Wadi El-Natrun region in Egypt to provide 100 m^3 per day drinking water for the surrounding community.[69]

A lot of RE powered units such as PV/RO are limited to small-scale desalination systems and have varying specific energy consumption values ranging from 1.1 to 16 kW h m^{-3}.[70] Solar energy source is variable and unavoidable to be faced, and thus efficient storage means, and batteries are required to tackle this problem. For remote locations, instead of RO, the use of PV is also attractive for electro-dialysis where BW is readily available throughout a year.

Other hybrid solar PV-wind desalination systems proved to be implemented and run under different circumstances. A hybrid solar PV-wind power plant used for the supply of electricity for RO desalination system was constructed in Libya's coast.[71,72] The nominal production of the plant was intended to be 300 m^3 per day for the supply of a village with potable water. The plant design was integrated to a back-up diesel generator and electrochemical storage systems in combination with the hybrid RE system. In another configuration, Mohamed and Papadakis[73] presented a different design of a stand-alone hybrid wind-PV-wind system to power a SWRO desalination unit, with energy recovery using a simplified spreadsheet model. Daily and monthly simulation and economic analyses were also

Open Access Article. Published on 08 April 2021. Downloaded on 11/13/2025 9:41:38 AM.
This article is licensed under a Creative Commons Attribution-NonCommercial 3.0 Unported Licence.

performed. The calculated fresh water production cost was estimated to be 5.2 € per m^3, and the realized energy saving was close to 50% when a pressure-exchanger-type energy recovery unit was considered.

Henderson *et al.*[74] showed that seawater desalination using RO is an attractive choice because of the low specific energy consumption, typically around 10 kW h m^{-3} of water for a small unit.

The problem with RO is its sensitivity to fluctuating power. Fadigas and Dias[75] used a hybrid system that uses both gravitational potential energy and wind energy. The economic viability is supported, not only by the fact that the model uses a renewable "free" source of energy, but also because of a predicted low specific consumption of energy of around 2.811 kW h m^{-3}). Kroiß A. *et al.*[76] discussed the benefits of the combination of RO systems with PV/T systems as the RO fresh-water output is increased at elevated seawater temperatures. However, the PV efficiency is increased due to cooling with seawater. In addition, a seawater-proof system was presented. This study included experimental investigation on a PVT prototype.

A team from Tunisia, Jordan and Spain made a study on the control of PV/T-based RO desalination plant.[77] The control of the circulated fluid rate improves the system productivity. The feed water temperature is raised by the utilization of the recovery of the PVT-produced heat for feed water preheating in order to improve the RO productivity. The system control aimed to prevent overheating of the PV solar modules. A fuzzy logic controller was designed to achieve these objectives. The controller effectiveness was validated using LABVIEW.

Hybrid renewable energy systems (HRES) are systems that combine two or more renewable energy resources. Khan *et al.*[78] discussed the modelling of the electrical components of the HRES such as modelling of the PV system, the modelling of the wind system, the battery, the generator, the RO system, modelling and the performance of a hybrid PV and wind RO system. In addition, the sizing and economics of an HRES-RO system was presented. An economic analysis of desalination of solar- and wind-driven plants was conducted and showed an improvement in the prospects for solar desalination technology and produced water cost reduction. The cost is affected by several factors including the solar radiation and level of salinity. In the case of using Wind-RO technology, the cost of the produced water depends on wind speed, feed water total dissolved solids (TDS) and the capacity of the desalination plant.

Several challenges face the RE desalination systems. Some of these challenges were given by ref. 47. The first challenge for coupling desalination with cooling systems is the need for the centralized cooling system to make the system more efficient and economical. Thus, it is recommended to implement the coupling of centralized cold storage and water production. The second challenge is the need to develop an intelligent management and control system between energy and desalination output to achieve an optimized system.

Abou Rayan *et al.*[58] showed that desalination using RE does offer the potential of providing a sustainable source of potable water for some communities, particularly those in arid areas. The successful renewable energy desalination system/desalination applications prove that the coupling of two technologies (PV and wind energy) is technically mature and capable of providing fresh water at a reasonable cost using RO.

6. RE-desalination systems in Egypt

The Middle East and North Africa (MENA) region has vast areas that have limited access to natural fresh-water resources. In addition, these areas are exposed to high solar radiation most of the year. The increasing fossil fuel prices and their environmental impact led to an increase in R&D of the usage of the RE in all the fields including the water desalination.

Another bright side of using RE is the reduction of the greenhouse gasses (GHG), which is related to the climate change. Multiple studies have been performed to investigate the impacts of using fossil fuel on climate change and global warming in Egypt.[79,80]

A developed project by A. Kassem *et al.*[81] was executed for the construction of Hybrid RE systems for the supply of services for the rural settlements of Mediterranean partner countries in 2008 *via* the HYRESS Project of FP6 Project funded by EU.

In another project that was funded by STIFA, a 30 m^3 per day RE-driven RO desalination plant was designed and installed in Wadi Al-Natroon site. The plant was used to study the effect of different levels of the four plant' main input variables, namely, the feed water flow rate, concentration, pressure and temperature on five system performance indicators, namely, the system water permeation rate, brine flow rate, recovery ratio, concentration (polarization) factor, and specific energy.[81]

Numerous studies investigated the use of hybrid RE to power the desalination processes. A study was presented in 2013 (ref. 82) that aimed at making a numerical model that would allow finding the optimal design of a hybrid solar-wind source of energy to operate a small-sized RO desalination plant. The optimum parameters for the design included a number of PV modules, wind turbines capacities, the wind tower height, the rotor blade radius, and total capacity of the desalination plant. The aim was to optimize these parameters to obtain the minimum cost of the produced fresh water. The RO unit would have to produce the required monthly water demand needs to a small community (of 100 people) powered by the hybrid solar-wind system. The results indicated that water can be produced at a cost ranging from 0.498, 0.851 to 1.211 \$ per m^3 for the three specific energy consumptions, respectively using the design parameters in this case-study.

Another study of a RE power-driven high-performance MSF desalination unit integrated with nano-filtration (NF) membrane was presented by Abdel Nasser *et al.*[83] The pilot test unit was constructed to calculate the performance of the novel de-aeration and brine mix (MSF-DBM) configuration. The NF was added to enable the MSF desalination unit to operate at a high top brine temperature (TBT) of 130 °C. The capacity of the desalination pilot plant was 1.0 m^3 per day of desalinated water. The plant was installed at Wadi El-Natroun (Egypt). The study found that the high-performance NF-MSF-DBM and unit's input thermal energy which make the integration with (the

 © 2021 The Author(s). Published by the Royal Society of Chemistry

Open Access Article. Published on 08 April 2021. Downloaded on 11/13/2025 9:41:38 AM.
This article is licensed under a Creative Commons Attribution-NonCommercial 3.0 Unported Licence.

relatively expensive) RE as a desalination plant driver is a viable option.

City for Scientific Research Technological Applications (SRTA-City) in Borg El-Arab, Egypt is holding several research projects that are related to desalination and RE. One of these running large projects is Multipurpose Applications by Thermodynamic Solar (MATS) project, which is funded by European Frame-Work Projects (FP7) and Egyptian Academy of Scientific Research and Technology (ASRT).[84] This Mega R&D project is a full-scale demonstration of Concentrating Solar Power (CSP) technology through the industrial development, the realization and the experimental operation of a multipurpose facility to be installed in Egypt. The facility is designed to produce 1.0 MW of electricity and 250 m^3 per day of desalinated water. This project was a big collaboration between 11 international partners and 8 Egyptian partners to contribute in both the R&D and installation phases of the CSP power plant. The MATS plant layout is shown in Fig. 5a, which shows the solar field that has a total 10 000 m^2 active area.[85]

MATS system uses combined solar field and gas-powered back up unit, to provide the required heat to be stored in the TES (Thermal Energy Storage tank) with the built-in steam generator (SG) system, as shown in Fig. 5b. In the MATS system, molten salts (MS) loop is uninterruptedly pumped from the bottom of the TES tank through the MS pump to the zones of the solar field. Under normal operation, the designed bottom temperature of the MS in the TES tank is 290 °C in order to maintain the MS in liquid phase. MS exits the solar field at a given temperature depending (in general) on the incoming solar radiation (DNI) and the overall efficiency/cleanness of solar collectors. The objective is to keep this exit temperature constant at a design value of 550 °C. Thus, the MS flow rate in the solar field is adjusted in order to obtain this exit temperature: the lower the DNI value and solar collectors' efficiency/cleanness, the lower the applied MS flow rate in the solar field. The inlet MS temperature of the top of the TES tank is kept stable at 550 °C. During normal operation, the steam generator (SG) is fed with liquid water to generate a superheated steam. Thermal power will be provided by the MS re-circulating inside the TES tank. Steam turbine is fed with superheated steam discharged as non-condensed steam. Under these conditions, a steam turbine connected to an electrical generator will

Fig. 5 MATS project, (a) Google Earth Image of MATS layout demonstrating three stages of the solar field (December 2017),[84] (b) MATS main components illustrating the combination of steam generators with heat storage systems located at SRTA-City, Egypt.

Open Access Article. Published on 08 April 2021. Downloaded on 11/13/2025 9:41:38 AM.
This article is licensed under a Creative Commons Attribution-NonCommercial 3.0 Unported Licence.

Table 2 Supposed detailed operation parameters of the RE-RO/MD unit at SRTA-City, Egypt

Point	Description of the operation parameter
1	Brackish saline water feed, 20 000 ppm, $T = 15$ °C.
2	Pre-heated inlet saline water, 20 000 ppm, $T = 15$–30 °C
3	Pre-treated inlet saline water, $T = 15$–30 °C
4	RO brine rejection, 40 000 ppm, $T = 15$–30 °C
5	RO brine rejection, 40 000 ppm, $T = 20$–35 °C
6	RO brine rejection, 40 000 ppm, $T = 55$–65 °C
7	RO brine rejection, 40 000 ppm, $T = 70$–80 °C
8	MD brine rejection, 45 000 ppm, $T = 35$–40 °C
9	MD brine rejection, 45 000 ppm, $T = 25$–30 °C
10	RO product water, 250–350 ppm, $T = 15$–30 °C
11	MD product water, 50 ppm, $T = 25$–30 °C
12	Product water, 300 ppm, $T = 15$–30 °C
13	PV/T hot stream, $T = 60$–70 °C
14	PV/T coldstream, $T = 25$–35 °C

produce the gross power of 1.0 MWe. The steam rejected by the turbine is sent to the two-effects MED desalination unit, where the steam is condensed to sustain 250 m^3 per day demi-water production. Thermal duty of the MED will be provided by turbine back pressure steam condensation. It is noteworthy that in this steam Rankine cycle, the MED unit works as a condenser. This proof of concept pilot project will allow testing the CSP (concentrating solar power) technology in a location very advantageous regarding the solar radiation rate as an example for the diffusion of this technology in other Mediterranean countries.[85]

Another on-going project is to develop a greenhouse-desalination system self-productive of energy and irrigating water, which is funded by STDF in Egypt according to the scheme of the National Challenge Program (NCP). The main objective of this project is to develop, design and pilot testing of an innovative and cost-effective agriculture greenhouse (GH) that grows its own energy and irrigating water demand. The new GH utilizes the surplus solar energy (above that required for the plants' photosynthetic process) to produce the required irrigation water *via* direct solar distillation (solar stills) units. In addition, the ventilation air humidity will be partially recovered before leaving the GH to gain additional fresh water *via* a humidification dehumidification (HDH) desalination system. The GH will also be equipped with a vertical thermal chimney to naturally circulate/ventilate the system and minimize its O&M and cost. A novel automated smart control framework will be integrated with the GH in order to control all its vital parameters (Table 2). The proposed control framework employs a smart artificial intelligence unit that processes the real-time distributed sensor feedback to dynamically adjust the GH climate, fertilization-process and irrigating water-treatment towards the best interest of the enclosed crops and plants. The target is to provide the GH with controlled microclimatic conditions that suit the optimum plant productivity. Both the numerical results and the experimental measurements from the pilot test unit will allow the investigation of the developed system's operational performance under controlled internal microclimatic conditions. The validated programs and experimental results will be used to develop the conceptual design of "commercial system" that suits different operating conditions for the innovative greenhouse.

Salah *et al.*[86] investigated the performance of the above stand-alone agriculture greenhouse (GH) integrated with on-roof transparent solar stills (TSS) to be self-sufficient of irrigation water. For different climatic conditions of New Borg El-Arab, Egypt, controlling both the condenser bypass and fresh air ratios can be used to satisfy the required micro-climate conditions and water requirements for plant growth and minimize the power consumption for the cooling system. The system produces insufficient amount of water during the coldest day, which indicates the need for additional solar stills to be installed for supplying a large quantity of water.

However, an ongoing project at SRTA-City through Egypt-UK Newton-Musharafa Fund: Institutional Links, STIFA Project ID 26214 aims to develop, design and pilot test an innovative RE driven–hybrid desalination technology for remote areas. The driving RE electrical & thermal energies will be generated using integration of PVT and wind turbine units. A hybrid

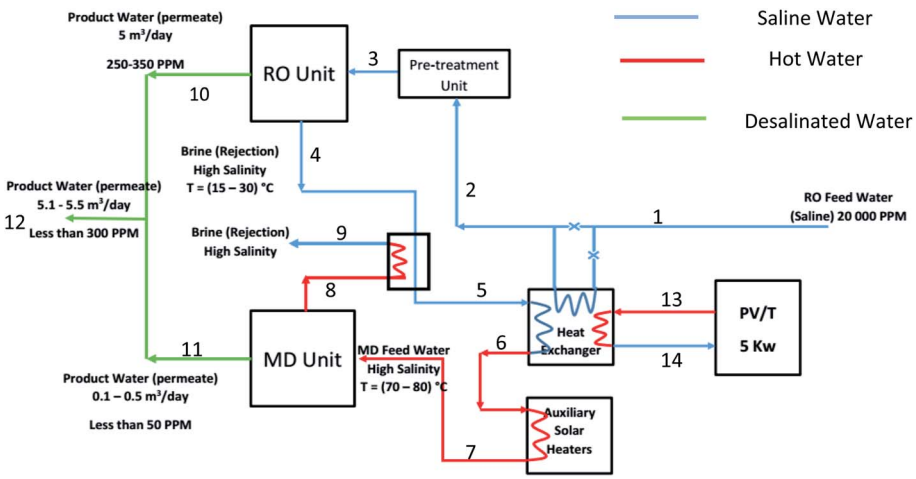

Fig. 6 Process Flow Diagram (PFD) for the RE-RO/MD Unit at SRTA-City, Egypt.

 © 2021 The Author(s). Published by the Royal Society of Chemistry

Open Access Article. Published on 08 April 2021. Downloaded on 11/13/2025 9:41:38 AM.
This article is licensed under a Creative Commons Attribution-NonCommercial 3.0 Unported Licence.

desalination process integrating RO and MD will be developed. An integrated hybrid power-hybrid desalination system will be designed to suit small communities in remote areas in Egypt such as Sinai, North West, Red sea coasts and isolated desert areas. The project involves the development of precise numerical models followed by a detailed design of 5.0 m^3 per day pilot test unit (Fig. 6), leading to the development of a standard commercial small-scale unit for small community use. The collaboration will have immense impact in terms of; (i) providing clean water to remote areas at a lower cost, and (ii) opening up further research avenues in desalination and green energy. A recent published article[87] demonstrated the design and numerical model activities for the development of the desalination system of an off-grid solar energy-powered RO for continuous production of freshwater with PVT cooling and the recovery of the PVT cooling heat for RO feedwater pre-heating. This work aimed to quantify the increase in the efficiency of PV cells and RO desalination for the application of seawater as the cooling medium for PV. A battery unit is included to ensure continuous production of the desalinated water. A reduction of 0.12 kW h m^{-3} in the energy consumption is achieved leading to a 6% reduction in the required solar panel surface area.

7. Conclusions and outlook

The increasing needs of fresh water supply in Egypt due to the limitation of the available freshater resources, population increase and industrial needs as well as other challenges need more attention to be paid, requiring alternative water resources other than the Nile River water. Desalination of either brackish or sea water is the most suitable option for facing such challenges. The power needed for performing the desalination process is a challenge due to the increased cost of fossil fuel and their negative environmental impacts. Therefore, available hybrid RE resources such as solar (PVT, CSP) and wind energies in the Egyptian climate form an alternative sustainable source of energy. The present review shows that more R&D is needed for the use of the hybrid RE where fossil fuel or electricity grid is not accessible or expensive to be widely distributed throughout the country. These R&D efforts should include both numerical model designs and site plants designs in many remote areas to well study how the coupling between PVT, windmills, batteries for energy storage, RO, MD and/or CSP could enhance the performance of the power and consequently potable water production to reduce energy consumption, optimize the PVT/CSP-wind-battery coupling and RO–MD integration. This integration of RE–RO and RE-RO/MD may present a suitable option for the availability of potable water products in such rural areas.

Nomenclature

AGMD	Air gap membrane distillation
BW	Brackish water
CCPWD	Capillary channel plasmonic water desalination
CPV	Concentrated photovoltaic
CSP	Concentrating solar power
DC	Direct current
DCMD	Direct contact membrane distillation
DNI	Direct normal irradiances
DO	dissolved oxygen
ED	Electro-dialysis
elc	Electrical
ERC	Energy recovery device
FO	Forward osmosis
GHI	Global horizontal irradiances
HDH	Humidification-dehumidification
HRES	Hybrid renewable energy systems
IRENA	International renewable energy agency
LCW	Levelized cost of water
MENA	Middle East and North Africa
MED	Multiple effect distillation
ME-AD	Multi-evaporator adsorption
MED-AD	Multiple effect distillation-adsorption distillation
MD	Membrane distillation
MF	Micro filtration
MATS	Multipurpose applications by thermodynamic solar
MO	Molten salts
MSF	Multi stages flash
NF	Nano filtration
NREA	National Renewable Energy Authority
O&M	Operation and maintenance
ORC	Organic Rankine cycle
pe	Primary energy
PV	Photovoltaic
PVT	Photovoltaic thermal
PFD	Process flow diagram
ppm	part per million
RE	Renewable energy
R&D	Research & development
RO	Reverse osmosis
SGMD	Sweep gas membrane distillation
STIFA	Science, technology and innovation funding authority
SG	Steam generator
SWRO	Sea water reverse osmosis
TBT	Top brine temperature
TDS	Total dissolved solids
UF	Ultra-filtration
UPR	Universal performance ratio
VC	Vapor compression
VMD	Vacuum membrane distillation
WHO	World health organization

Conflicts of interest

There are no conflicts to declare.

Acknowledgements

The financial support of the British Council (Project ID: 216423297 – Egypt) in the UK and the Science and Technology Development Fund (STDF) (Currently known as Science,

Open Access Article. Published on 08 April 2021. Downloaded on 11/13/2025 9:41:38 AM.
This article is licensed under a Creative Commons Attribution-NonCommercial 3.0 Unported Licence.

Technology and Innovation Funding Authority – STIFA) (Project ID: 26214) in Egypt is gratefully acknowledged.

References

1 WHO (World Health Organization), *Guidelines for Drinking-water Quality Incorporating first addendum. Vol. 1*, 3rd edn, 2008, available from http://helid.digicollection.org/pdf/s8578e/s8578e.pdf.

2 M. W. Shahzad, M. Burhan, A. Li and K. Choon Ng, Energy-water-environment nexus underpinning future desalination sustainability, *Desalination*, 2017, **413**, 52–64.

3 A. Dakkak, *Egypt's Water Crisis – Recipe for Disaster, August 11, (2020), Environment, Middle East, Pollution, Water*, available from https://www.ecomena.org/egypt-water/.

4 F. Alnaimat, J. Klausner and B. Mathew, *Solar Desalination in Book of Desalination and Water Treatment*, 2018, DOI: 10.5772/intechopen.76981.

5 M. Thimmaraju, D. Sreepada, G. S. Babu, B. K. Dasari, S. K. Velpula and N. Vallepu, Desalination of Water, in *Book of Desalination and Water Treatment* (2018), DOI: 10.5772/intechopen.78659.

6 F. van Weert, J. van der Gun and J. Reckman, Global Overview of Saline Groundwater Occurrence and Genesis, *International Groundwater Resources Assessment Centre (IGRAC), Report nr. GP 2009-1*, The Netherlands, 2009, available from https://www.un-igrac.org/sites/default/files/resources/files/Global%20Overview%20of%20Saline%20Groundwater%20Occurences%20and%20Genesis.pdf.

7 J. G. Aende and A. Hassanpour, Seawater Desalination: A Review of Forward Osmosis Technique, Its Challenges, and Future Prospects, *Processes*, 2020, **8**, 901, DOI: 10.3390/pr8080901.

8 M. Shatat, M. Worall and S. Riffat, Opportunities for solar water desalination worldwide, *Sustain. Cities Soc.*, 2013, **9**, 67–80, DOI: 10.1016/j.scs.2013.03.004.

9 A. Alkaisi, R. Mossad and A. Sharifian-Barforoush, A review of the water desalination systems integrated with renewable energy, *Energy Procedia*, 2017, **110**, 268–274, DOI: 10.1016/j.egypro.2017.03.138.

10 D. Curto, V. Franzitta and A. Guercio, A Review of the Water Desalination Technologies, *Appl. Sci.*, 2021, **11**(2), 670, DOI: 10.3390/app11020670.

11 P. Pazouki, R. A. Stewart, E. Bertone, F. Helfer and N. Ghaffour, Life cycle cost of dilution desalination in off-grid locations: a study of water reuse integrated with seawater desalination technology, *Desalination*, 2020, **491**, 114584.

12 IWA (International Water Association), *Desalination Past, Present and Future*, August 17 (2016), available from, http://www.iwa-network.org/desalination-past-present-future/.

13 M. W. Shahzad, M. Burhan, H. S. Son, S. J. Oh and K. Choon Ng, Desalination Processes Evaluation at Common Platform: A Universal Performance Ratio (UPR) Method, *Appl. Therm. Eng.*, 2018, **134**, 62–67.

14 E. Jones, Q. Manzoor, M. T. H. van Vlie, V. Smakhtin and S. Kang, The state of desalination and brine production: a global outlook, *Sci. Total Environ.*, 2019, **657**, 1343–1356, DOI: 10.1016/j.scitotenv.2018.12.076.

15 Y. Zheng and K. B. Hatzel, Technoeconomic analysis of solar thermal desalination, *Desalination*, 2020, **474**, 114168, DOI: 10.1016/j.desal.2019.114168.

16 A. Seyedsaeid, A. Behrooz, A. Babak, E. Mohammed, Z. Xiang and A. Bahman, Looking Beyond Energy Efficiency: An Applied Review of Water Desalination Technologies and an Introduction to Capillary-Driven Desalination, *Water*, 2109, **11**(4), 696, DOI: 10.3390/w11040696.

17 A. Alkhudhiri, N. Darwish and N. Hilal, Membrane distillation: A comprehensive review, *Desalination*, 2012, **287**, 2–18, DOI: 10.1016/j.desal.2011.08.027.

18 A. S. Hassan and H. E. S. Fath, Review and assessment of the newly developed MD for desalination processes, *Desalin. Water Treat.*, 2012, **51**(1–3), 574–585, DOI: 10.1080/19443994.2012.697273.

19 D. Gonzalez, J. Amigo and F. Suarez, Membrane distillation: Perspective for sustainability and improved desalination, *Renewable Sustainable Energy Rev.*, 2017, **80**, 238–259, DOI: 10.1016/j.rser.2017.05.078.

20 M. Chapman, F. Leitz and A. Tiffenbach, *Variable Salinity Desalination, Desalination and Water Purification Research and Development Report No. 176*, U.S. Department of the Interior Bureau of Reclamation Technical Service Center, 2014, available from https://www.usbr.gov/research/dwpr/reportpdfs/report176.pdf.

21 M. C. Mickly, Review of concentrate management options, ground water report 363, technical papers, case studies and desalination technology resource, in *The Future of Desalination in Texas*, vol. 2, Texas Water Development Board, (2004) available from https://texaswater.tamu.edu/readings/desal/concentratedisposal.pdf.

22 B. L. Pangarkar, M. G. Sane and M. Guddad, Reverse Osmosis and Membrane Distillation for Desalination of Groundwater: A Review, International Scholarly Research Network, *ISRN Mater. Sci.*, 2011, 523124, DOI: 10.5402/2011/523124.

23 S. Jamaly, N. N. Darwish, I. Ahmed and S. W. Hasan, A short review on reverse osmosis pre-treatment technologies, *Desalination*, 2014, **354**, 30–38, DOI: 10.1016/j.desal.2014.09.017.

24 S. Lee, J. Choi, Y. Gyun Park, H. Shon, C. H. Ahn and S.-H. Kim, Hybrid desalination processes for beneficial use of reverse osmosis brine: Current status and future prospects, *Desalination*, 2019, **454**, 104–111.

25 P. Pazouki, H. R. Lu, A. El Hanandeh, W. Biswas, E. Bertone, F. Helfer and R. A. Stewart, Comparative environmental life cycle assessment of alternative osmotic and mixing dilution desalination system configurations, *Desalination*, 2021, **504**, 114963.

26 F. E. Ahmed, R. Hashaikeh and N. Hilal, Hybrid technologies: The future of energy efficient desalination – A review, *Desalination*, 2020, **495**, 114659.

27 K. Elsaid, M. Kamil, E. T. Sayed, M. A. Abdelkareem, T. Wilberforce and A. Olabi, Environmental impact of

 © 2021 The Author(s). Published by the Royal Society of Chemistry

Open Access Article. Published on 08 April 2021. Downloaded on 11/13/2025 9:41:38 AM. This article is licensed under a Creative Commons Attribution-NonCommercial 3.0 Unported Licence.

desalination technologies: A review, *Sci. Total Environ.*, 2020, **748**, 141528.

28 *Modern bioenergy leads the growth of all renewables to 2023*, according to latest IEA market forecast, available at: https://www.iea.org/news/modern-bioenergy-leads-the-growth-of-all-renewables-to-2023-according-to-latest-iea-market-forecast.

29 M. W. Shahzad, K. Thu, Y.-deuk Kim and K. Choon Ng, An experimental investigation on MEDAD hybrid desalination cycle, *Appl. Energy*, 2015, **148**, 273–281.

30 K. Choon Ng, K. Thu, S. J. Oh, L. Ang, M. W. Shahzad and A. B. Ismail, Recent developments in thermally-driven seawater desalination: Energy efficiency improvement by hybridization of the MED and AD cycles, *Desalination*, 2015, **356**, 255–270.

31 M. W. Shahzad, M. Burhan and K. Choon Ng, Pushing desalination recovery to the maximum limit: Membrane and thermal processes integration, *Desalination*, 2017, **416**, 54–64.

32 M. W. Shahzad, M. Burhan, N. Ghaffour and K. Choon Ng, A multi evaporator desalination system operated with thermocline energy for future sustainability, *Desalination*, 2018, **435**, 268–277.

33 *Roadmap for Renewable Energy Future*, 2016 edn. International Renewable Energy Agency (IRENA), Abu Dhabi, https://www.irena.org/-/media/Files/IRENA/Agency/Publication/2016/IRENA_REmap_2016_edition_report.ashx.

34 A. Cipollina, E. Tzen, V. Subiela, M. Papapetrou, J. Koschikowskie, R. Schwantes, *et al.*, Renewable energy desalination: performance analysis and operating data of existing RES desalination plants, *Desalin. Water Treat.*, 2014, **55**, 3120–3140, DOI: 10.1080/19443994.2014.959734.

35 R. M. Youssef, and A. F. Shakeweer. *Desalination Technology Roadmap 2030, The Cabinet Information and Decision Support Centre, Egypt* (2011), EFP Brief No. 253, Available from http://www.foresight-platform.eu/wp-content/uploads/2013/02/EFP-Brief-No.-253_Desalination-Technology-Roadmap-2030.pdf.

36 M. C. Garg, Chapter 4: Renewable Energy-Powered Membrane Technology: Cost Analysis and Energy Consumption, *Current Trends and Future Developments on (Bio-) Membranes, Renewable Energy Integrated with Membrane Operations*, 2019, pp. 85–110.

37 M. M. Mahmoud and I. H. Ibrik, Techno-economic feasibility of energy supply of remote villages in Palestine by PV-systems, diesel generators and electric grid, *Renewable Sustainable Energy Rev.*, 2006, **10**(2), 128–138, DOI: 10.1016/j.rser.2004.09.001.

38 S. M. Shalaby, Reverse osmosis desalination powered by photovoltaic and solar Rankine cycle power systems: A review, *Renewable Sustainable Energy Rev.*, 2017, **73**, 789–797, DOI: 10.1016/j.rser.2017.01.170.

39 S. Kumarasamy and S. Narasimhan, Optimal operation of battery-less solar powered reverse osmosis plant for desalination, *Desalination*, 2015, **375**, 89–99, DOI: 10.1016/j.desal.2015.07.029.

40 A. M. Helal, S. A. Al-Malek and E. S. Al-Katheeri, Economic feasibility of alternative designs of a PV-RO desalination unit for remote areas in the United Arab Emirates, *Desalination*, 2008, **221**, 1–16, DOI: 10.1016/j.desal.2007.01.064.

41 A. Kaya, T. M. Evren and M. Koc, A Levelized Cost Analysis for Solar-Energy-Powered Sea Water Desalination in the Emirate of Abu Dhabi, *Sustainability*, 2019, **11**, 1691, DOI: 10.3390/su11061691.

42 B. Anand, R. Shankar, S. Murugavelh, W. Rivera, K. Midhun Prasad and R. Nagarajan, A review on solar photovoltaic thermal integrated desalination technologies, *Renewable Sustainable Energy Rev.*, 2021, **141**, 110787.

43 Z. Said, A. Mehmood, A. Waqas, A. A. Hachicha and R. Loni, Central *versus* off-grid photovoltaic system, the optimum option for the domestic sector based on techno-economic-environmental assessment for United Arab Emirates, *Sustain. Energy Technol. Assess.*, 2021, **43**, 100944.

44 S.-F. Cheah, PHOTOVOLTAIC REVERSE OSMOSIS DESALINATION SYSTEM, *Desalination and Water Purification Research and Development Program Report No. 104* (2004), available from: https://www.usbr.gov/research/dwpr/reportpdfs/report104.pdf.

45 F. Silva Pinto and R. Cunha Marques, Desalination projects economic feasibility: a standardization of cost determinants, *Renewable Sustainable Energy Rev.*, 2017, **78**, 904–915, DOI: 10.1016/j.rser.2017.05.024.

46 M. A. Eltawil, Z. Zhengming and L. Yuan, A review of renewable energy technologies integrated with desalination systems, *Renewable Sustainable Energy Rev.*, 2009, **13**, 2245–2262, DOI: 10.1016/j.rser.2009.06.011.

47 M. Chandrashekara and A. Yadav, Water desalination system using solar heat, *Renewable Sustainable Energy Rev.*, 2017, **67**, 1308–1330, DOI: 10.1016/j.rser.2016.08.058.

48 S. Dubey, J. N. Sarvaiya and B. Seshadri, Temperature Dependent Photovoltaic (PV) efficiency and its effect on PV production in the world, a review, *Energy Procedia*, 2013, **33**, 311–321, DOI: 10.1016/j.egypro.2013.05.072.

49 *Solar rooftop calculator, Solar photovoltaic installation*, Indian ministry of new and renewable energy, (2018) available from, https://solarrooftop.gov.in/rooftop_calculator and http://223.31.33.76/spin-grid/public/Grid/financial_tool/2.

50 C. Charcosset, A review of membrane processes and renewable energies for desalination, *Desalination*, 2009, **245**, 214–231, DOI: 10.1016/j.desal.2008.06.020.

51 IRENA, International Renewable Energy Agency, *Renewable Energy Outlook: Egypt*, 2018, Abu Dhabi, available from https://www.irena.org/-/media/Files/IRENA/Agency/Publication/2018/Oct/IRENA_Outlook_Egypt_2018_En.pdf.

52 NREA, *The Solar Atlas of Egypt*, 2018, available from http://www.nrea.gov.eg/Content/files/SOLAR%20ATLAS%202018%20digital1.pdf.

53 G. E. Hassan, A. Salah, M. Elhelw, A. Hassan, K. M. Saqr and H. Fath, Optimum Operational Performance of a New Stand-Alone Agricultural Greenhouse with Integrated-TPV Solar Panels, *Sol. Energy*, 2016, **136**, 303–316, DOI: 10.1016/j.solener.2016.07.017.

Open Access Article. Published on 08 April 2021. Downloaded on 11/13/2025 9:41:38 AM. This article is licensed under a Creative Commons Attribution-NonCommercial 3.0 Unported Licence.

54 G. E. Hassan, M. E. Youssef, M. A. Ali, Z. E. Mohamed and A. I. Shehata, Performance assessment of different day-of-the-year-based models for estimating global solar radiation - Case study: Egypt, *J. Atmos. Sol.-Terr. Phys.*, 2016, **149**, 69–80, DOI: 10.1016/j.jastp.2016.09.011.

55 G. E. Hassan, M. E. Youssef, Z. E. Mohamed, M. A. Ali and A. A. Hanafy, New Temperature-based Models for Predicting Global Solar Radiation, *Appl. Energy*, 2016, **179**, 437–450, DOI: 10.1016/j.apenergy.2016.07.006.

56 G. E. Hassan, M. E. Youssef, M. A. Ali, E. Z. Mohamed and A. A. Hanafy, Evaluation Of Different Sunshine-Based Models For Predicting Global Solar Radiation – Case Study: New Borg El-Arab City, Egypt, *J. Therm. Sci.*, 2018, **22**(2), 979–992, DOI: 10.2298/TSCI160803085H.

57 M. E. Elsayed, G. E. Hassan, Z. E. Mohamed and M. A. Ali, Investigating the Performance of Different Models in Estimating Global Solar Radiation, *Adv. Nat. Appl. Sci.*, 2016, **10**(4), 379–390.

58 M. Abou Rayan, B. Djebedjian and I. Khaled, Evaluation of the effectiveness and performance of desalination equipment in Egypt. *8th International Water Technology Conference*, **IWTC8** 2004, Alexandria, Egypt, 2004: pp. 653–668, available from http://www.iwtc.info/2004_pdf/10-2.pdf.

59 IRENA, International Renewable Energy Agency, *Renewable Power Generation Costs In 2019*, (2020), available from file:///C:/Users/ADEL/Downloads/IRENA_Power_Generation_Costs_2019.pdf.

60 R. Oldach, *Matching Renewable Energy with Desalination Plants (Muscat, Sultanate of Oman: The Middle East Desalination Research Center [MEDRC]) MEDRC Series of R&D Reports, MEDRC Project (2001), 97-AS-006a*, September 2001.

61 S. M. Islam, C. V. Nayar, A. Abu-Siada, M. M. Hasan, *Power Electronics for Renewable Energy Sources (Chapter 25), Power Electronics Handbook*, 4th edn, 2018, pp. 783–827, https://doi.org/10.1016/B978-0-12-811407-0.00027-1.

62 M. F. Forstmeier, F. D'Amato Mannerheim, M. Shah, Y. Liu, M. Baldea and A. Stella, Feasibility study on wind-powered desalination, *Desalination*, 2007, **203**, 463–470, DOI: 10.1016/j.desal.2006.05.009.

63 R. Vujčić and M. Krneta, Wind-driven seawater desalination plant for agricultural development on the islands of the County of Split and Dalmatia, *Renewable Energy*, 2000, **19**, 173–183, DOI: 10.1016/S0960-1481(99)00029-4.

64 K. Paulsen and F. Hensel, Introduction of a new Energy Recovery System-optimized for the combination with renewable energy, *Desalination*, 2005, **184**, 211–215, DOI: 10.1016/j.desal.2005.03.060.

65 R. Robinson and G. Ho K. Mathew, Development of a reliable low-cost reverse osmosis desalination unit for remote communities, *Desalination*, 1992, **86**, 9–26, DOI: 10.1016/0960-1481(96)88909-9.

66 P. Feron, The use of wind power in autonomous reverse osmosis seawater desalination, *J. Wind Eng.*, 1985, **9**, 180–199, DOI: 10.1002/we.1985-2.

67 C. T. Kiranoudis, N. G. Voros and Z. B. Maroulis, Wind energy exploitation for reverse osmosis desalination plants, *Desalination*, 1997, **109**, 195–209, DOI: 10.1016/S0011-9164(97)00065-9.

68 C. C. K. Liu, J.-W. Parkb, R. Migita and G. Qin, Experiments of a prototype wind-driven reverse osmosis desalination system with feedback control, *Desalination*, 2002, **150**, 277–287, DOI: 10.1016/S0011-9164(02)00984-0.

69 G. Papadakis,E. S. Mohamed, G. Kyriakarakos, A. S. Kassem, Hybrid Renewable energy systems for the supply of services in rural settlements of Mediterranean partner countries, *The case study of the hybrid system in Egypt, 24th European Photovoltaic Solar Energy Conference, 21–25 September*, Hamburg, Germany, 2009, pp. 4019–4025, DOI: 10.4229/24thEUPVSEC2009-6DO.8.5.

70 H. Nassrullah, S. F. Anis, R. Hashaikeha and N. Hilal, Energy for desalination: A state-of-the-art review, *Desalination*, 2020, **491**, 114569, DOI: 10.1016/j.desal.2020.114569.

71 S. A. Kershman, J. Rheinländer and H. Gabler, Seawater reverse osmosis powered from renewable energy sources—hybrid wind/photovoltaic/grid power supply for small-scale desalination in Libya, *Desalination*, 2002, **153**, 17–23, DOI: 10.1016/S0011-9164(02)01089-5.

72 S. A. Kershman, J. Rheinländer, T. Neumann and O. Goebel, Hybrid wind/PV and conventional power for desalination in Libya-GECOL's facility for medium and small scale research at RasEjder, *Desalination*, 2005, **183**, 1–12, DOI: 10.1016/j.desal.2005.04.021.

73 E. S. Mohamed and G. Papadakis, Design, simulation and economic analysis of a stand-alone reverse osmosis desalination unit powered by wind turbines and photovoltaic, *Desalination*, 2004, **164**, 87–97, DOI: 10.1016/S0011-9164(04)00159-6.

74 C. R. Henderson, J. F. Manwell and J. G. McGowan, A wind/diesel hybrid system with desalination for Star Island, NH: feasibility study results, *Desalination*, 2009, **237**, 318–329, DOI: 10.1016/j.desal.2005.07.054.

75 E. A. F. A Fadigas and J. R. Dias, Desalination of water by reverse osmosis using gravitational potential energy and wind energy, *Desalination*, 2009, **237**, 140–146, DOI: 10.1016/j.desal.2007.12.029.

76 A. Kroiß, A. Präbst, S. Hamberger, M. Spinnler, Y. Tripanagnostopoulos and T. Sattelmayer, Development of a Seawater-proof Hybrid Photovoltaic/thermal (PV/T) Solar Collector, *Energy Procedia*, 2014, **52**, 93–103, DOI: 10.1016/j.egypro.2014.07.058.

77 M. Ammous, S. Charfi, A. Harb and M. Chaabene, Improvement of PV/T Based Reverse Osmosis Desalination Plant Performances Using Fuzzy Logic Controller, *International Journal of Modern Nonlinear Theory and Application*, 2016, **5**, 11–27, DOI: 10.4236/ijmnta.2016.51002.

78 M. A. M. Khan, S. Rehman and F. A. Sulaiman, A hybrid renewable energy system as a potential energy source for water desalination using reverse osmosis: A review, *Renewable Sustainable Energy Rev.*, 2018, **97**, 456–477, DOI: 10.1016/j.rser.2018.08.049.

79 A. E. Eissa and M. M. Zaki, The impact of global climatic changes on the aquatic environment, *Procedia Environ. Sci.*, 2011, **4**, 251–259, DOI: 10.1016/j.proenv.2011.03.030.

 © 2021 The Author(s). Published by the Royal Society of Chemistry

Open Access Article. Published on 08 April 2021. Downloaded on 11/13/2025 9:41:38 AM.
This article is licensed under a Creative Commons Attribution-NonCommercial 3.0 Unported Licence.

80 M. Domroes and A. El-Tantawi, Recent temporal and spatial temperature changes in Egypt, *Int. J. Climatol.*, 2005, **25**, 51–63, DOI: 10.1002/joc.1114.

81 S. S. Kassem, (2014), Water Desalination by Reverse Osmosis unit Driven By Renewable Energy. Ph. D. Dissertation, Alexandria University, Egypt, available from http://main.eulc.edu.eg/eulc_v5/Libraries/start.aspx?fn=ApplySearch&ScopeID=&criteria1=2.&SearchText1=Kassem%2C+Samira+Shalaby.

82 K. Mousa, A. Diabat and F. Hassan, Optimal design of a hybrid solar-wind power to drive a small-size reverse osmosis desalination plant, *Desalin. Water Treat.*, 2013, **51**(16–18), 3417–3427, DOI: 10.1080/19443994.2012.749199.

83 A. A. Mabrouk and H. E. S. Fath, Experimental study of high-performance hybrid NF-MSF desalination pilot test unit driven by renewable energy, *Desalin. Water Treat.*, 2013, **51**(37–39), 6895–6904, DOI: 10.1080/19443994.2013.773860.

84 *MATS Concentrating Solar Power Plant in SRTA-City*, 2017, available from http://www.mats.enea.it/CSP.asp.

85 *CONTRATTI ENEA CON LA COMMISSIONE EUROPEA*, 2016, available from http://www.snam.it/export/sites/snam-rp/repository/media/energy-morning/allegati_energy_morning/20170810_1.pdf.

86 A. H. Salah, G. E. Hassan, M. Elhelw, H. Fath and S. M. Elsherbiny, Analytical Investigation of Different Operational Scenarios of a Novel Greenhouse Combined with Solar Stills, *Appl. Therm. Eng.*, 2017, **122**, 297–310, DOI: 10.1016/j.applthermaleng.2017.05.022.

87 A. A. Monjezi, Y. Chen, R. Vepa, A. B. Kashyout, G. Hassan, H. E. Fath, *et al.*, Development of an off-grid solar energy powered reverse osmosis desalination system for continuous production of freshwater with integrated photovoltaic thermal (PVT) cooling, *Desalination*, 2020, **495**, 114679, DOI: 10.1016/j.desal.2020.114679.